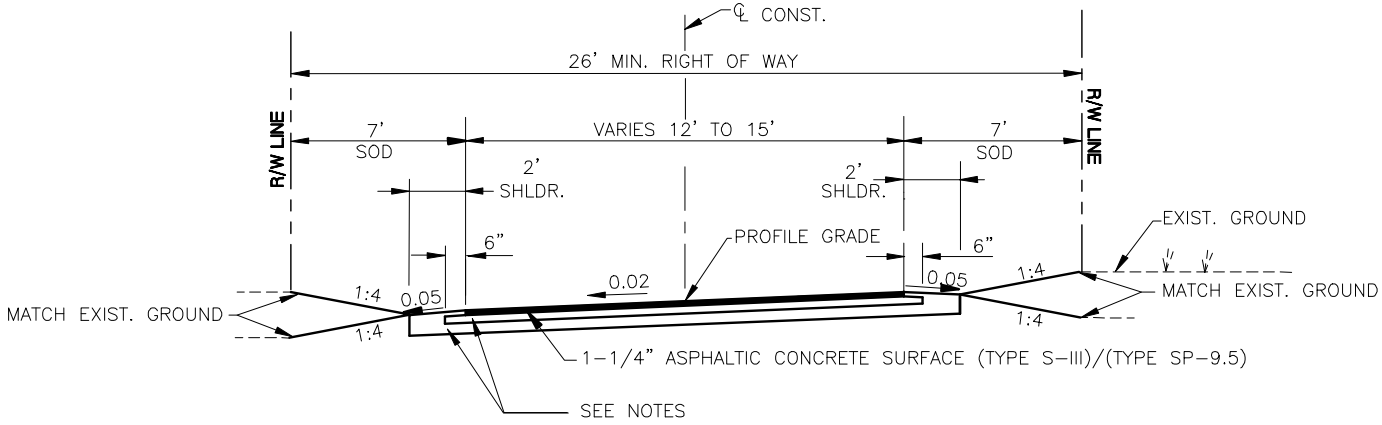

MULTI-USE TRAIL TYPICAL SECTION 1

N.T.S.

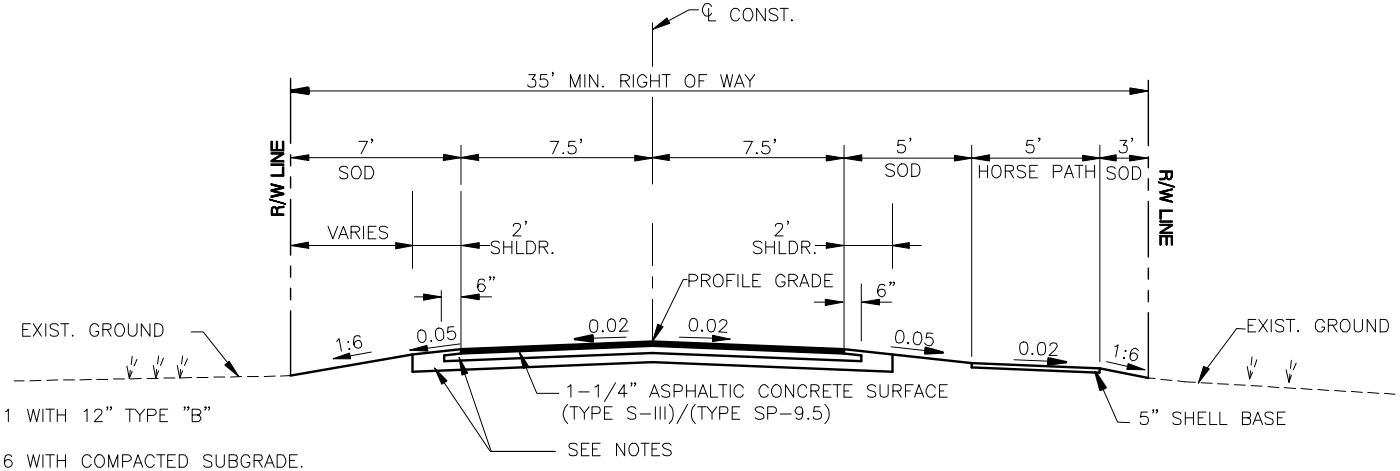

MULTI-USE TRAIL TYPICAL SECTION 2

N.T.S.

NOTES:

1. OPTIONAL BASE GROUP 1 WITH 12" TYPE "B" STABILIZATION LBR 40.
2. OPTIONAL BASE GROUP 6 WITH COMPACTED SUBGRADE.
3. ALL DIMENSIONS SHOWN ARE MINIMUM.
4. SEE APPROPRIATE SECTION OF TECHNICAL MANUAL FOR DESIGN PARAMETERS.

REVISION DATE :	TRANSPORTATION TECHNICAL MANUAL	Hillsborough County Florida	MULTI-USE TRAILS TYPICAL SECTIONS	DRAWING NO. TS-2 SHEET NO. 1 OF 1