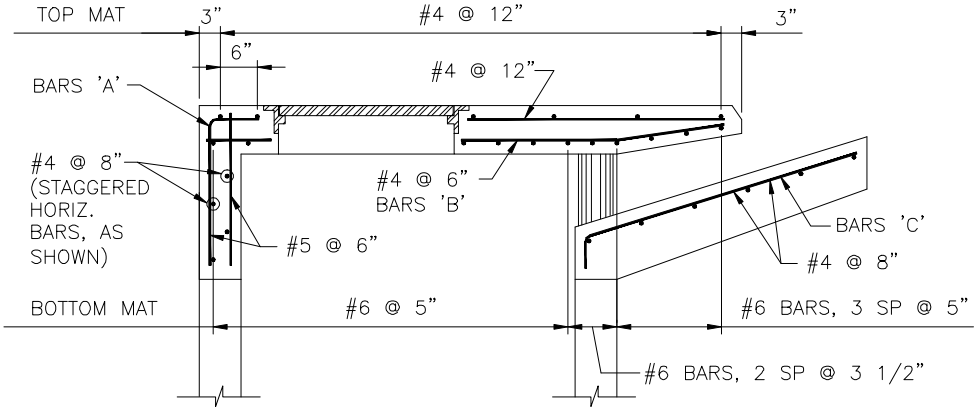

SECTION A–A
(REINFORCING)

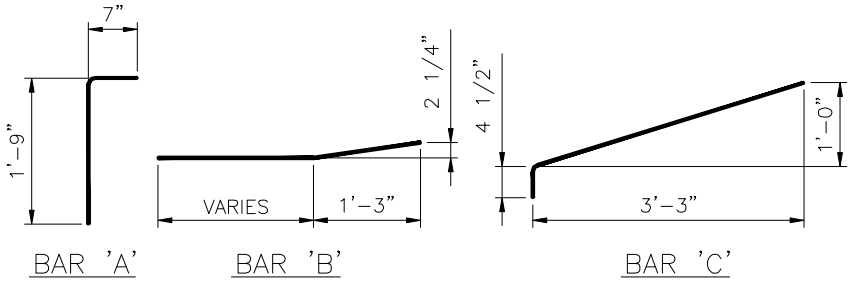

BAR BENDING DIAGRAMS

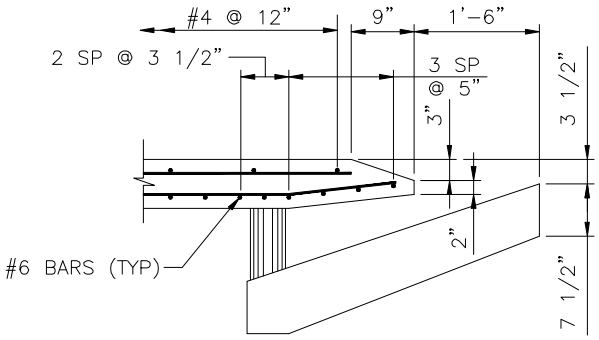

NOSE DETAIL FOR
TYPES A AND E CURBS

DRAWING NO. TD–18
SHEET NO. 8 OF 14

TYPE I INLET (3 OF 3)
(ADJACENT TO CURB)
DETAILS + SLAB REINFORCING

Hillsborough County Florida

TRANSPORTATION TECHNICAL MANUAL

REVISION DATE : 12/08