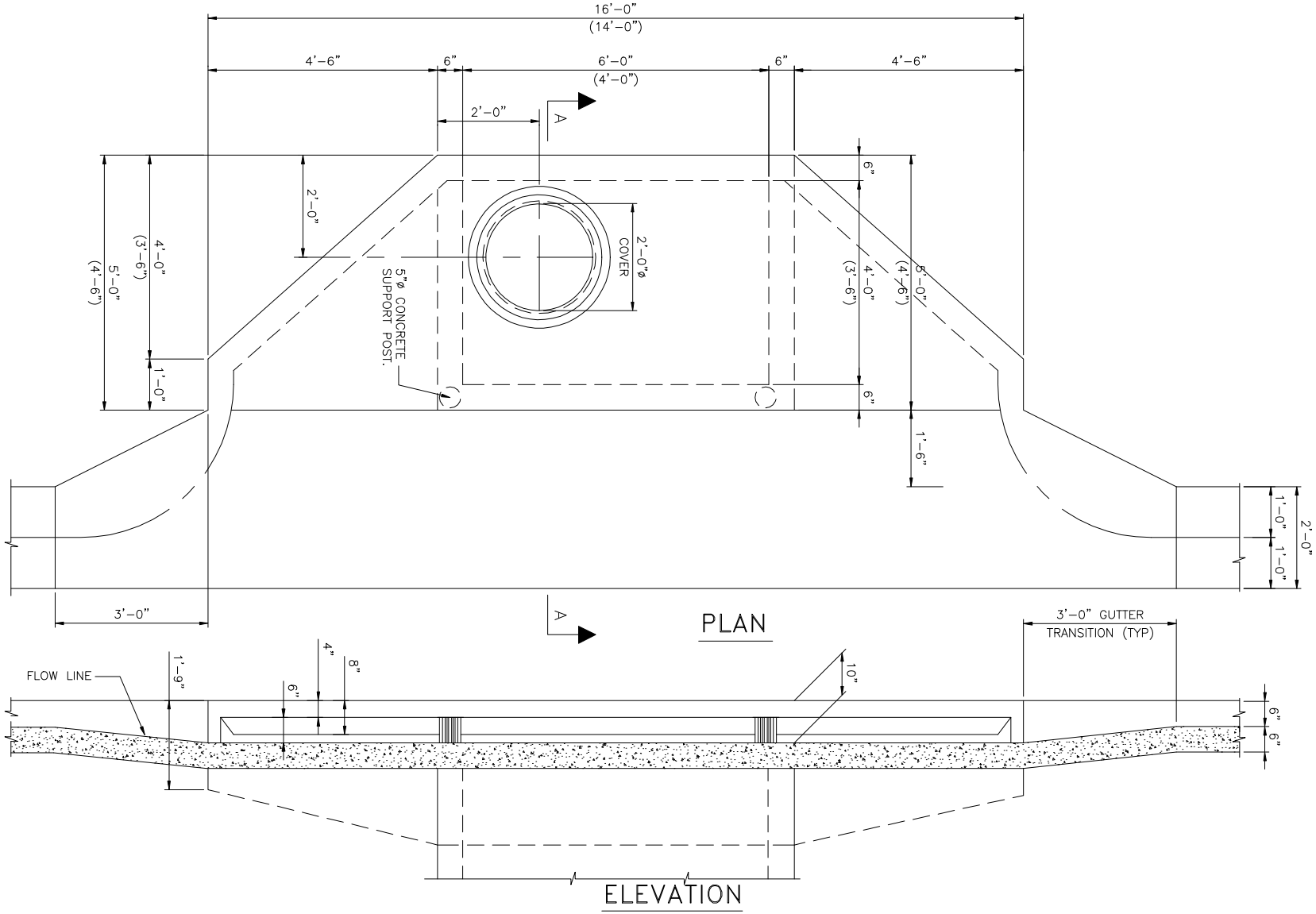

REVISION DATE : 12/08	TRANSPORTATION TECHNICAL MANUAL	Hillsborough County Florida	TYPE III INLET (OFFSET FROM CURB) PLAN AND ELEVATION	DRAWING NO. TD-18 SHEET NO. 4 OF 14