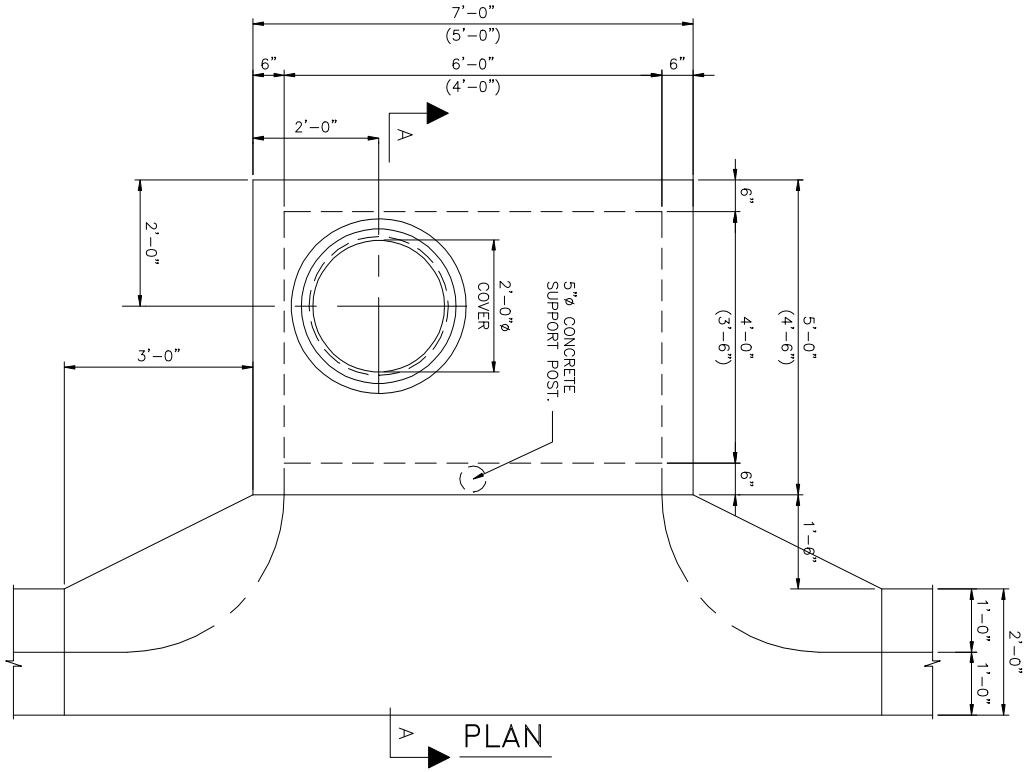

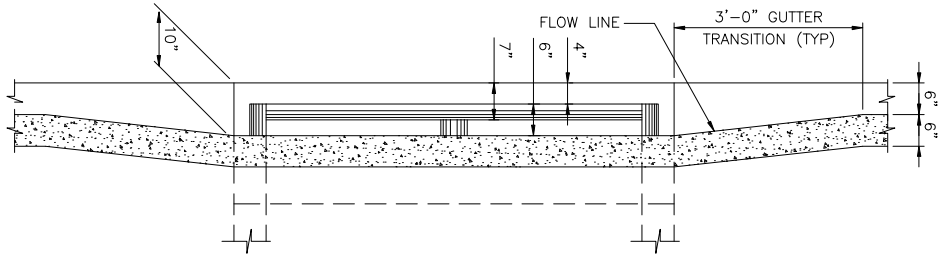

ELEVATION

REVISION DATE : 12/08	TRANSPORTATION TECHNICAL MANUAL	Hillsborough County Florida	TYPE I INLET (OFFSET FROM CURB) PLAN AND ELEVATION	DRAWING NO. TD-18
				SHEET NO. 2 OF 14