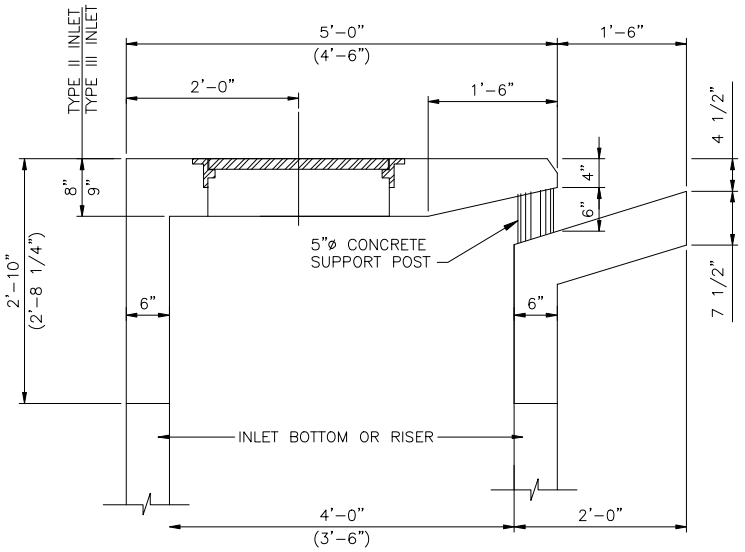

SECTION D-D

(DIMENSIONS)

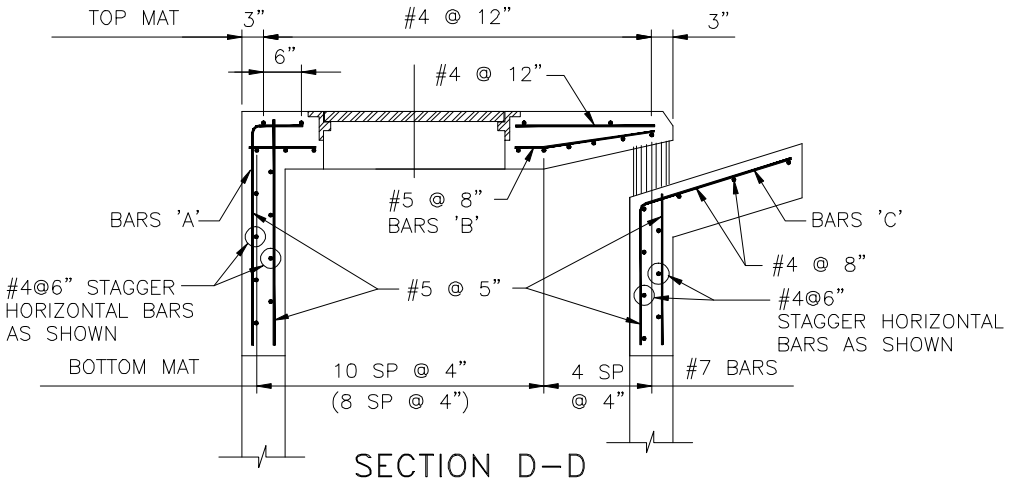

SECTION D-D

(REINFORCING)

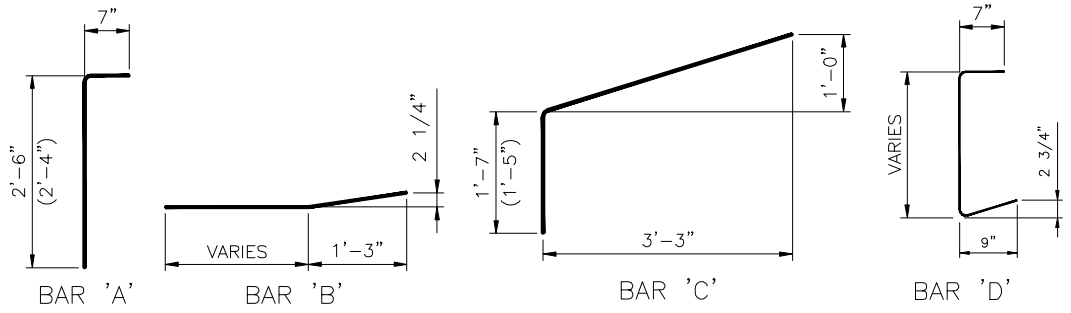

BAR BENDING DIAGRAMS

DRAWING NO. TD-18

SHEET NO. 13 OF 14

TYPE II + III INLET (1 OF 2)
(ADJACENT TO CURB)
SECTIONS AND DETAILS

Hillsborough County
Florida

TRANSPORTATION TECHNICAL
MANUAL

REVISION DATE :
12/08