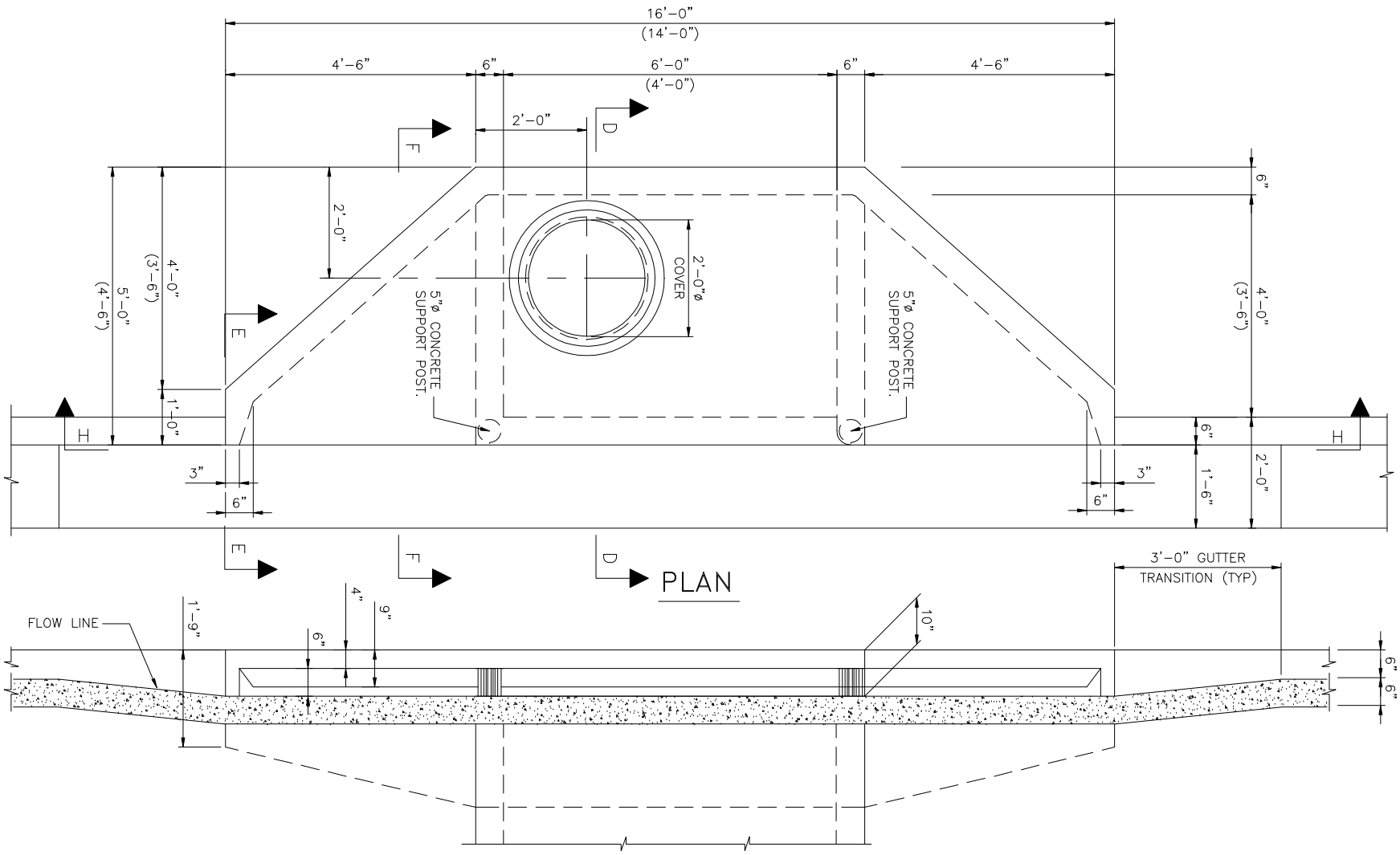

SECTION H-H

REVISION DATE : 12/08	TRANSPORTATION TECHNICAL MANUAL	Hillsborough County Florida	TYPE III INLET (1 OF 2) (ADJACENT TO CURB) PLAN + ELEVATION	DRAWING NO. TD-18 SHEET NO. 11 OF 14