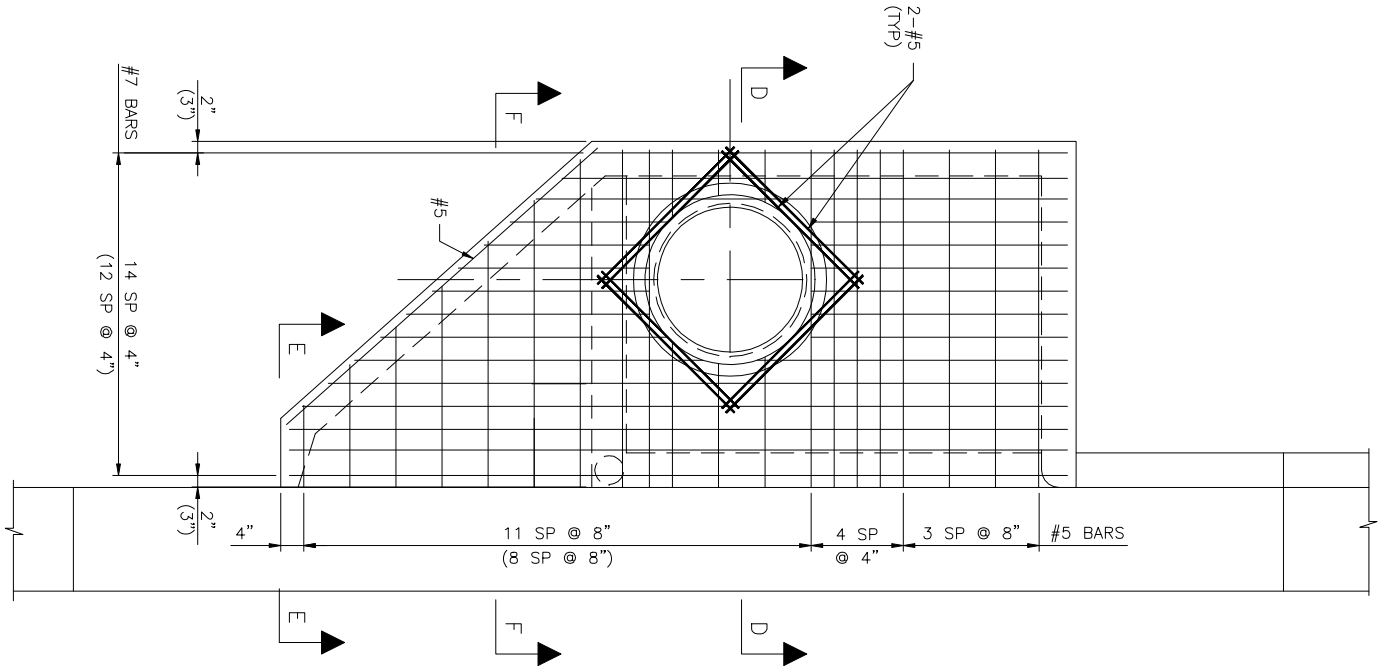

SLAB REINFORCING

(BOTTOM MAT SHOWN)

REVISION DATE : 12/08	TRANSPORTATION TECHNICAL MANUAL	Hillsborough County Florida	TYPE II INLET (2 OF 2) (ADJACENT TO CURB) SLAB REINFORCING	DRAWING NO. TD-18 SHEET NO. 10 OF 14