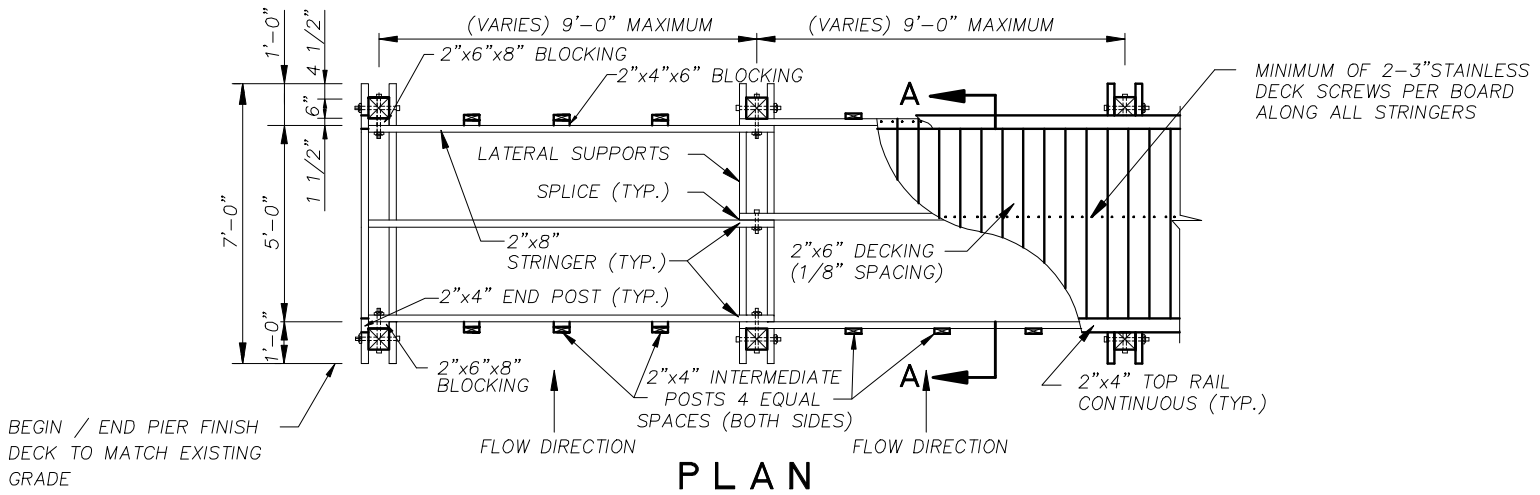

PLAN

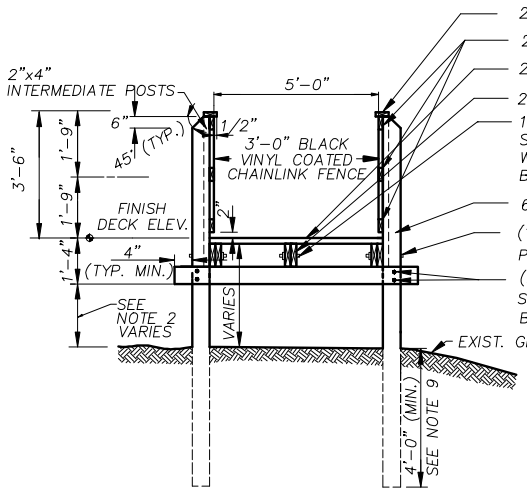

SECTION A-A

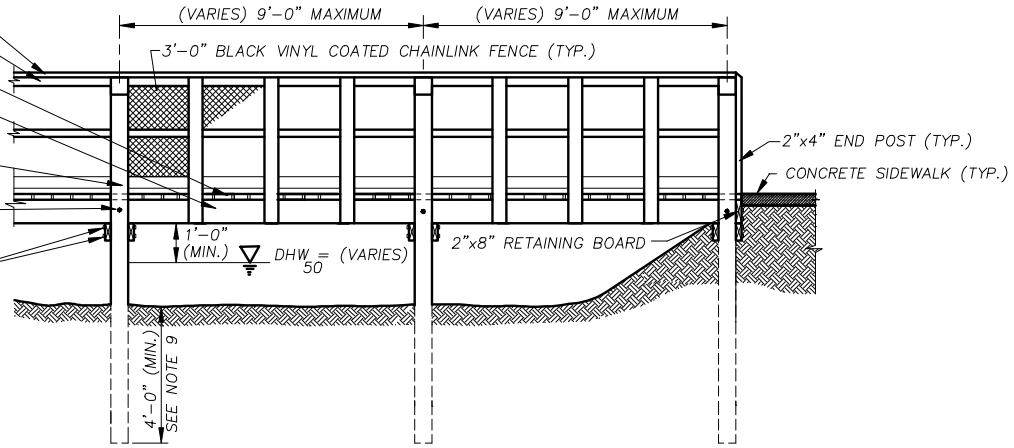

ELEVATION

NOTE: FOR GENERAL NOTES & DETAILS SEE SHEET 2 OF 2

REVISION DATE :	TRANSPORTATION TECHNICAL MANUAL	Hillsborough County Florida	PEDESTRIAN WALKWAY TYPICAL DETAILS	DRAWING NO. TD-11 SHEET NO. 1 OF 2