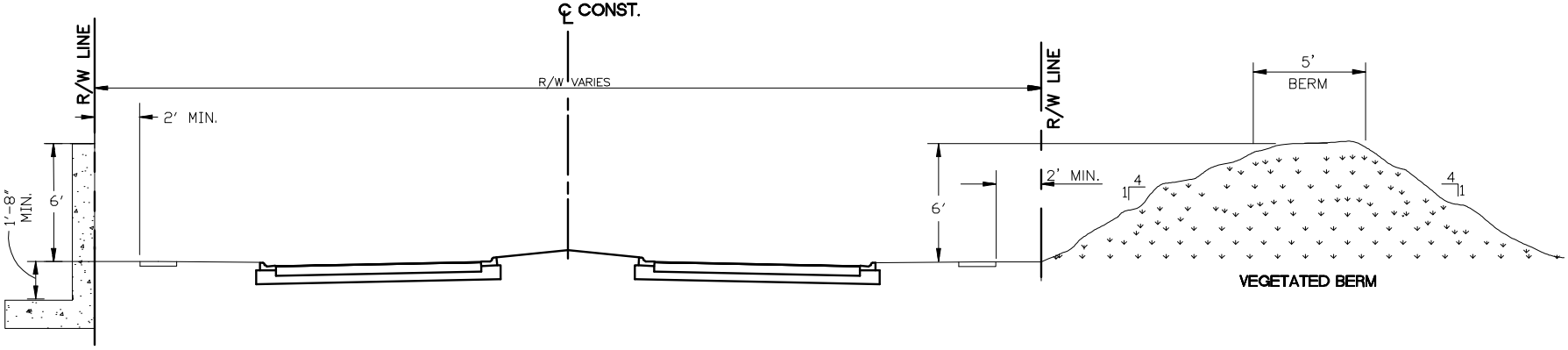

VEGETATED BERM

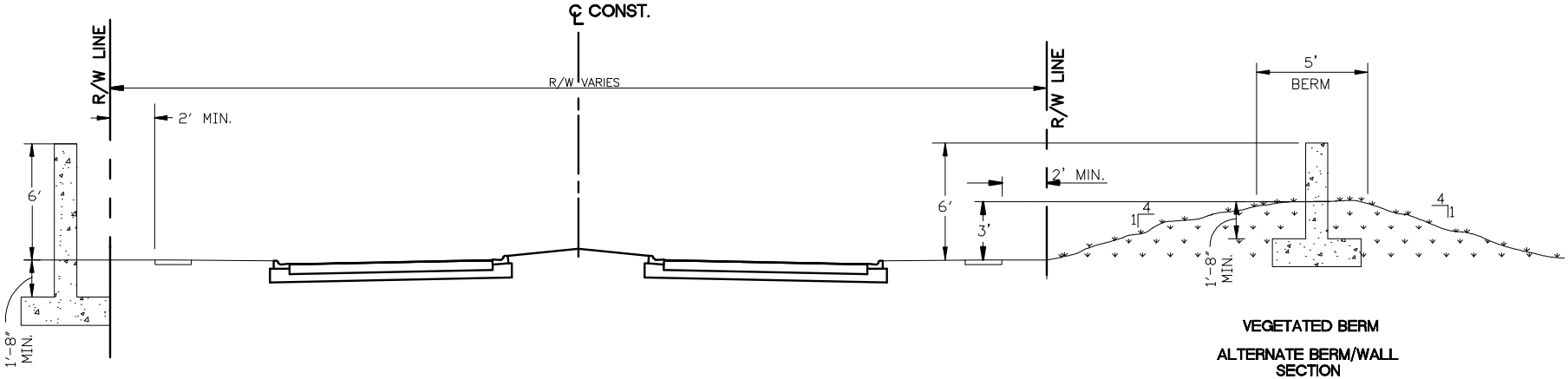

VEGETATED BERM

ALTERNATE BERM/WALL SECTION

REVISION DATE :	TRANSPORTATION TECHNICAL MANUAL	Hillsborough County Florida	BUFFER WALL / BERM TYPICAL DETAILS	DRAWING NO. TD-10
				SHEET NO. 1 OF 1