TEMPORARY "T" TYPE TURNAROUND

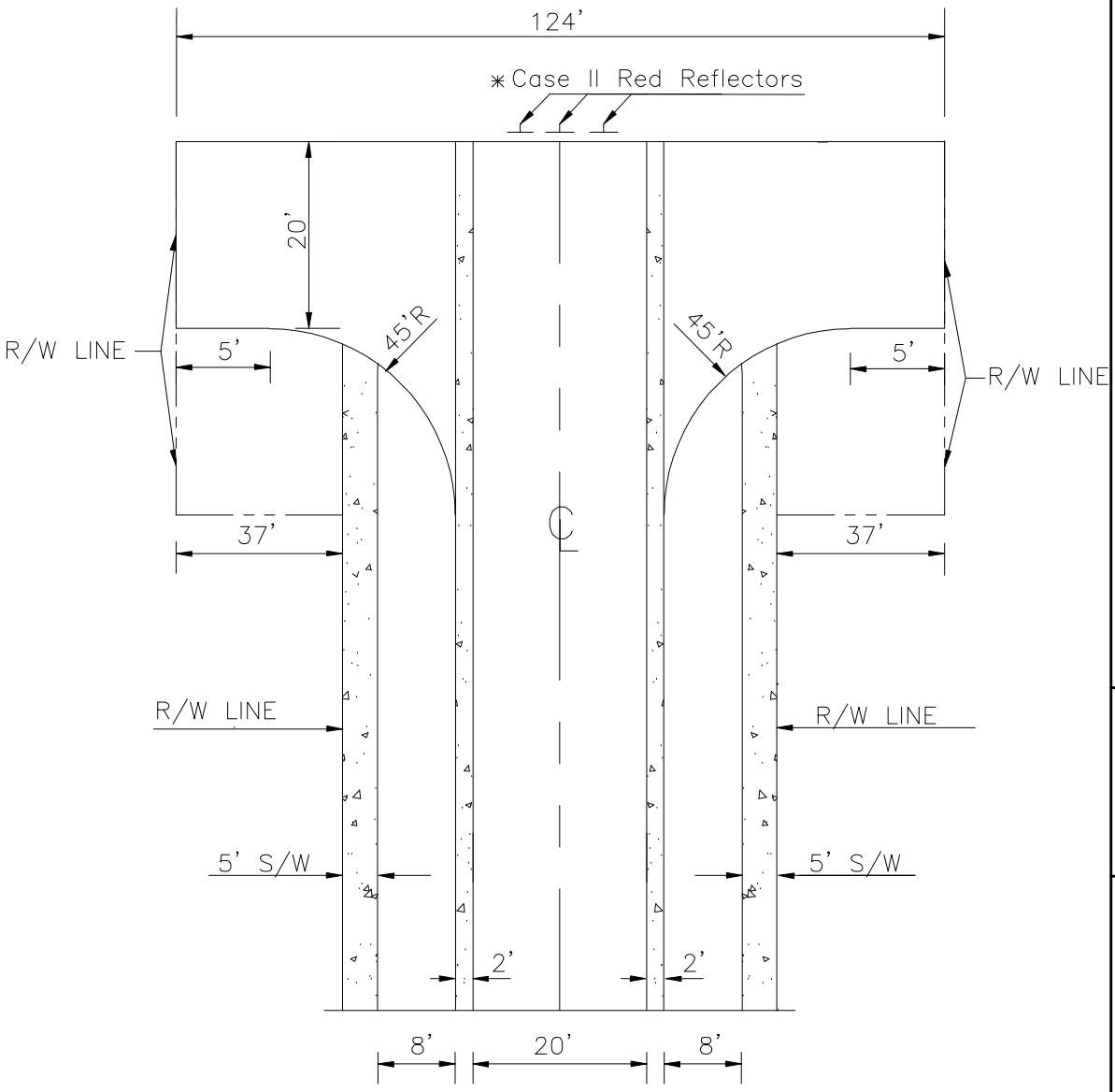

* Traffic control device at the road terminus shall conform to Index 17349 of FDOT Design Standards, latest edition.

DRAWING NO. TD-3

SHEET NO. 1 OF 1

TEMPORARY DEAD END TREATMENT
TYPICAL DETAILS

Hillsborough County Florida

TRANSPORTATION TECHNICAL MANUAL

REVISION DATE :