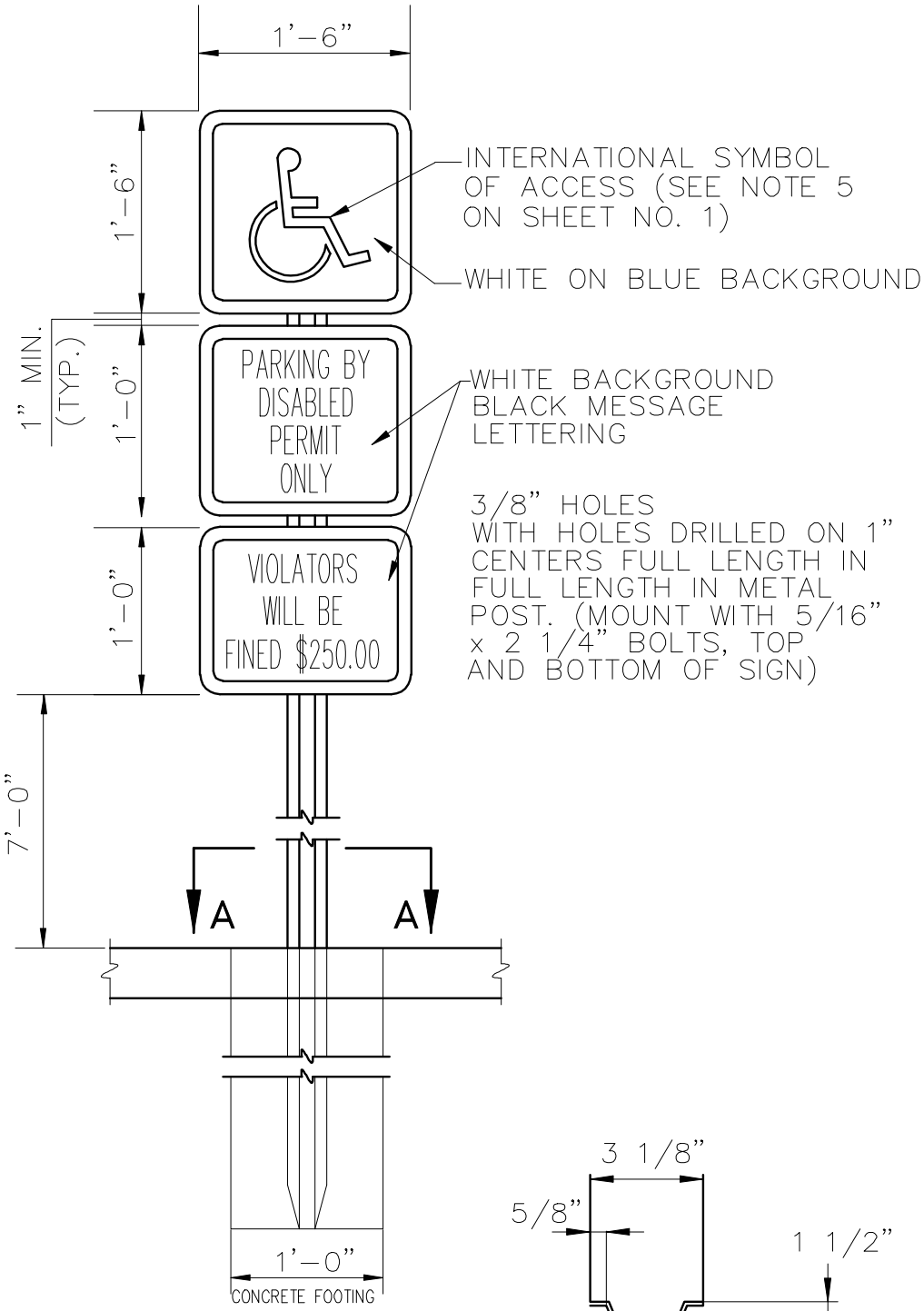

SIGN DETAIL
N.T.S

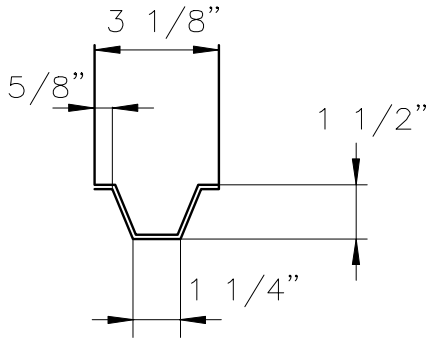

METAL POST
WT. OF BLANK POST SHALL BE 2-2 1/2"#/FT.
SECTION A - A

DRAWING NO. TD-1
SHEET NO. 2 OF 2

DISABLED PARKING / SIGNING
TYPICAL DETAILS

Hillsborough County Florida

TRANSPORTATION TECHNICAL MANUAL

REVISION DATE :