PLAN SYMBOLS

	HOME RUN TO PANELBOARD. NO. OF ARROWS INDICATE NO. OF CIRCUITS, HASH MARKS INDICATE NO. OF #12 AWG. CONDUCTORS. NO HASH MARKS INDICATE 2 #12 CONDUCTORS.
	CONDUIT CONCEALED IN WALL, IN SLAB ABOVE, OR ABOVE CEILING
	CONDUIT CONCEALED IN OR BELOW FLOOR OR UNDERGROUND.
	CONDUIT RUN EXPOSED. RUN PARALLEL OR PERPENDICULAR TO STRUCTURE OR WALL.
	FLEXIBLE CONDUIT WITH EQUIPMENT CONNECTION.
	CONCRETE ENCASED DUCTBANK.
A	CEILING MOUNTED LIGHTING FIXTURE, LETTER INDICATES TYPE (TYPICAL).
	WALL MOUNTED LIGHTING FIXTURE.
	FLUORESCENT LIGHTING FIXTURE, CEILING MOUNTED.
	EXTERIOR LUMINAIRE AND MOUNTING STANDARD.
	EXISTING EXTERIOR LIGHTING
	EMERGENCY BATTERY PACK LIGHTING FIXTURE.
J	JUNCTION BOX N.E.C. SURFACE MOUNTED UNLESS INDICATED OTHERWISE.
J	JUNCTION BOX PER N.E.C., FLUSH MOUNTED UNLESS INDICATED OTHERWISE.
	FLUSH OR SURFACE MOUNTED LIGHTING PANELBOARD.
	FLUSH OR SURFACE MOUNTED POWER PANELBOARD.
30	DRY TYPE TRANSFORMER. NO. INDICATES KVA RATING.
	90A, 208V, 1ø WELDING OUTLET
	20A, 125V, 3W DUPLEX RECEPTACLE IN FLUSH OUTLET BOX, 18" ABOVE FINISHED FLOOR.
	20A, 125V, 3W DUPLEX RECEPTACLE IN FLUSH OUTLET BOX, 48" ABOVE FINISHED FLOOR OR 2" ABOVE COUNTER AS REQUIRED.
	20A, 125V, 3W DUPLEX RECEPTACLE IN FLUSH, FLOOR MOUNTED OUTLET BOX.
	20A, 125V, 3W DUPLEX RECEPTACLE, SURFACE MOUNTED.
	DISCONNECT RACK MOUNTED
	HOA/DISCONNECT RACK MOUNTED
	30A, 250V 1Ø, 3W SINGLE RECEPTACLE IN FLUSH OUTLET BOX, 18" ABOVE FINISHED FLOOR.
S	SINGLE POLE SWITCH IN FLUSH OUTLET BOX, 48" ABOVE FINISHED FLOOR, UNLESS OTHERWISE NOTED (TYPICAL).
S	SINGLE POLE SWITCH, SURFACE MOUNTED.
S_3	THREE-WAY SWITCH IN FLUSH OUTLET BOX.
S_M	MOTOR DUTY, SINGLE PHASE DISCONNECT, NEMA 4X STAINLESS STEEL
	NON-FUSIBLE DISCONNECT SWITCH, 30A,3P UNLESS OTHERWISE INDICATED.
	NON-FUSIBLE DISCONNECT SWITCH, 30A,3P UNLESS OTHERWISE INDICATED, WITH REMOTE CONTROL STATION AS REQUIRED BY ELEMENTARY DIAGRAMS OR SPECS
10	ELECTRIC A.C. MOTOR, NO. INDICATES HORSEPOWER.
F 30/20	FUSED DISCONNECT SWITCH (30/20: 30=SWITCH RATING, 20=FUSE RATING)
M	MOTORIZED VALVE
	COMBINATION MOTOR STARTER
VFD	VARIABLE FREQUENCY DRIVE
T	THERMOSTAT
	ELECTRIC HEATER
	FLUSH OUTLET BOX AND TELEPHONE COVER PLATE 48" ABOVE FINISHED FLOOR.
C	CONTROL PULLBOX. SEE "PULL BOX DETAIL"
P	POWER MANHOLE. SEE "MANHOLE DETAIL"
TC	TERMINATION CABINET, CLASS 1, DIVISION 2
	EYS FITTING AND CORRESPONDING "CHICO" CEMENT. COMBINATION SHALL BE RATED TO PROVIDE A CLASS 1, DIVISION 2 INSTALLATION.
XX	MAJOR COMPONENT, X COMPONENT NUMBER
A-V	NAMEPLATE SCHEDULE

PLAN SYMBOLS (CONTINUED)

AIT	ANALYZING INDICATING TRANSMITTER
FE	FLOW ELEMENT
LS	LEVEL SWITCH
LE	LEVEL ELEMENT
PS	PRESSURE SWITCH
ZS	ZERO SPEED SWITCH
SV	SOLENOID VALVE
LLS	LIQUID LEVEL SWITCH
FS	FLOW SWITCH
FIT	FLOW INDICATING TRANSMITTER
LIT	LEVEL INDICATING TRANSMITTER

SINGLE LINE DIAGRAM SYMBOLS

	COMBINATION MOTOR STARTER
V	VOLTMETER
A	AMMETER
VS	THREE PHASE VOLT SWITCH
AS	THREE PHASE AMP SWITCH
GFI	GROUND FAULT INTERRUPTER
W	WATT HOUR METER
	FUSE
	CAPACITOR
	DRAW-OUT CIRCUIT BREAKER
	MOLDED CASE CIRCUIT BREAKER
	TYPICAL SELECTOR SWITCH AND CONTROL. SEE ELEMENTARY DIAGRAMS FOR EXACT TYPE.
10	ELECTRIC A.C. MOTOR, NO. INDICATES HORSEPOWER.
1	ELECTRIC D.C. MOTOR, NO. INDICATES HORSEPOWER.
	SERVICE OR EQUIPMENT GROUND.
	NON-FUSIBLE DISCONNECT SWITCH, 30A,3P UNLESS OTHERWISE INDICATED.
	NON-FUSIBLE DISCONNECT SWITCH, 30A,3P UNLESS OTHERWISE INDICATED, WITH REMOTE CONTROL STATION AS REQUIRED BY ELEMENTARY DIAGRAMS OR SPECS
	LIGHTING PANELBOARD
	POWER PANELBOARD
K	KIRK KEY INTERLOCK
	CURRENT TRANSFORMERS
	POTENTIAL TRANSFORMERS
	MANUAL OR AUTOMATIC TRANSFER SWITCH

CONTROL DIAGRAM SYMBOLS

	DUPLEX RECEPTACLE
	NORMALLY OPEN CONTACT
	NORMALLY CLOSED CONTACT
	LIMIT SWITCH, NORMALLY OPEN
	LIMIT SWITCH, NORMALLY CLOSED
	PRESSURE SWITCH, NORMALLY OPEN
	PRESSURE SWITCH, NORMALLY CLOSED
	FLOAT SWITCH, NORMALLY OPEN
	FLOAT SWITCH, NORMALLY CLOSED

CONTROL DIAGRAM SYMBOLS (CONTINUED)

	FLOW SWITCH, NORMALLY OPEN
	FLOW SWITCH, NORMALLY CLOSED
	TEMPERATURE SWITCH, NORMALLY OPEN
	TEMPERATURE SWITCH, NORMALLY CLOSED
	NORMALLY OPEN, TIMED TO CLOSE CONTACT
	NORMALLY CLOSED, TIMED TO OPEN CONTACT
	NORMALLY CLOSED, TIMED TO CLOSE CONTACT
	NORMALLY OPEN, TIMED TO OPEN CONTACT
LS	LIMIT SWITCH
XS	TORQUE SWITCH
PS	PRESSURE SWITCH
ZS	ZERO SPEED SWITCH
SV	SOLENOID VALVE
LLS	LIQUID LEVEL SWITCH
VS	VIBRATION SWITCH
AR	ALARM RELAY
AT	ALARM TIMER
CR	CONTROL RELAY
M	MOTOR STARTER
TR	TIMING RELAY
A	ALARM INDICATING LIGHT
R	RUN INDICATING LIGHT
	MOMENTARY CONTACT PUSHBUTTON
	MOMENTARY BREAK PUSHBUTTON OR RESET
K	KEYED SWITCH
	MAINTAINED CONTACT ON-OFF SWITCH
	START/STOP (S/S) CONTROL SWITCH MAINTAINED CONTACT
	THREE POSITION MAINTAINED CONTACT SELECTOR SWITCH
	FUSE
	MOLDED CASE CIRCUIT BREAKER
	CONTROL POWER TRANSFORMER
	REMOTE TERMINAL BLOCK POINT
	HORN

ABBREVIATIONS

A	AMPERES
ACCU	AIR COOLED CONDENSING UNIT
AFF	ABOVE FINISHED FLOOR
AHU	AIR HANDLING UNIT
AIC	AMPS INTERRUPTING CURRENT
AER	AERATOR
ATS	AUTOMATIC TRANSFER SWITCH
BKR	BREAKER
BLDG	BUILDING
C	CONDUIT
CLB	CURRENT LIMITING BREAKER
CP	CONTROL PANEL
CU	COPPER
DH	DATA HIGHWAY
DISC	DISCONNECT
DO	DIGITAL OUTPUT
DPDT	DOUBLE POLE DOUBLE THROW
DPST	DOUBLE POLE SINGLE THROW
EFF	EFFLUENT
ELEC	ELECTRICAL
ELR	EMERGENCY LOCK-OUT RELAY
EM	EMERGENCY
ENCL	ENCLOSURE
EP	EXPLOSION PROOF
ESB	ENERGY SAVING BALLAST
ETM	ELAPSED TIME METER
EUH	ELECTRIC UNIT HEATER

ABBREVIATIONS (CONTINUED)

EVA	ELECTRIC VALVE ACTUATOR
EXH	EXHAUST
EXIST	EXISTING
F&I	FINISH AND INSTALL
FPL	FLORIDA POWER AND LIGHT
FVNR	FULL VOLTAGE NON-REVERSING
GEN	GENERATOR
GFI	GROUND FAULT INTERRUPTER
GND, G	GROUND
GRS	GALVANIZED RIGID STEEL
HOA	HAND-OFF-AUTOMATIC
HOLR	HAND-OFF-LOCAL-REMOTE
HOR	HAND-OFF-REMOTE
HP	HORSEPOWER
HPS	HIGH PRESSURE SODIUM
HWY	HIGHWAY
INSTR	INSTRUMENTATION
IPS	INFLUENT PUMP STATION
KVA	KILOVOLT-AMPERES
KW	KILOWATT
LTG	LIGHTING
MAX	MAXIMUM
MCC	MOTOR CONTROL CENTER
MFR	MANUFACTURER
MH	METAL HALIDE
MIN	MINIMUM
MLO	MAIN LUGS ONLY
MSC	MANUFACTURER SUPPLIED CABLE
MTD	MOUNTED
MTS	MANUAL TRANSFER SWITCH
MV	MERCURY VAPOR
NEC	NATIONAL ELECTRIC CODE
NEUT, N	NEUTRAL
NTS	NOT TO SCALE
OC	ON CENTER
OH	OVERHEAD
P	POLE
PC	PHOTOCELL
PCP	PUMP CONTROL PANEL
PE	POWER EQUIPMENT
PM	PHASE MONITOR
PNL	PANEL
PS	PUMP STATION
PVC	POLYVINYL CHLORIDE
RA	RIGID ALUMINUM
RECPT	RECEPTACLE
RTU	REMOTE TELEMETRY UNIT
RVNR	REDUCED VOLTAGE NON-REVERSING
SH	SHIELDED
SS	STAINLESS STEEL
STP	SHIELDED TWISTED PAIR
STR	STARTER
SUPP	SUPPRESSOR
SW	SWITCH
SWGR	SWITCHGEAR
TBR	TO BE REMOVED
TD	TIME DELAY
TR	TRANSFORMER
TYP	TYPICAL
UG	UNDERGROUND
UON	UNLESS OTHERWISE NOTED
UPS	UNINTERRUPTABLE POWER SUPPLY
UV	ULTRAVIOLET
V	VOLT
VFD	VARIABLE FREQUENCY DRIVE
W	WATT
W/	WITH
WP	WEATHERPROOF
ø	PHASE

NOTES

1. ALL WORK SHALL COMPLY WITH N.E.C. AND LOCAL CODES.
2. CONDUCTORS SHALL NOT BE SPLICED EXCEPT AS NOTED IN SPECS.
3. ALL CONTROL PANELS SHALL BE UL LISTED.
4. THESE DRAWINGS ARE INTENDED TO SHOW STANDARDS ON NEW PUMP STATIONS. AT THE COUNTY'S DISCRETION REHABS AND RENOVATIONS MAY HAVE DIFFERING DETAILS ON A SITE BY SITE BASIS.

REV.NO.	DESCRIPTIONS	DATE
2	REVISED, TO INCORPORATE FIELD CHANGES	8/26/15
1	CONFORMED	5/17/13

REVISIONS

SEAL

SEAL

NOTE
FOR USE WITH THE FOLLOWING "ME" PKGS ONLY

3PH/480VAC/25-75HP

HILLSBOROUGH COUNTY
PUBLIC UTILITIES
ENGINEERING & ENVIRONMENTAL SERVICES GROUP
925 E. TWIGGS STREET/TAMPA FLORIDA 33602/PH. (813) 272-5977

TRIPLEX WASTEWATER PUMP STATION
ELECTRICAL, CONTROL & INSTRUMENTATION

ELECTRICAL SYMBOLS, NOTES, AND ABBREVIATIONS

DATE:	OCTOBER 2011
PROJ. #	1179-0013
DRAWN	
DESIGNED	
CHECKED	
PROJ. MGR.	

SCALE
HORIZONTAL:
VERTICAL: NA

FILE NUMBER
DRAWING NUMBER
E-0.0

STATUS: REVISED
REVISION 2

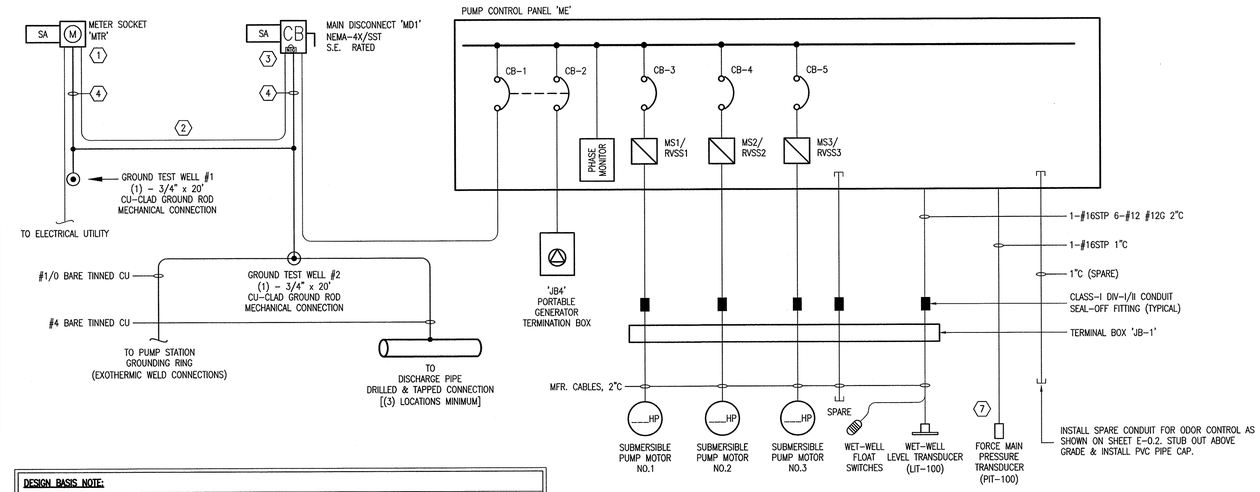

DESIGN BASIS NOTE:

THIS DRAWING REPRESENTS THE STANDARD DESIGN FOR ALL HILLSBOROUGH COUNTY STANDARD WASTEWATER PUMPING STATIONS. IT WAS DEVELOPED TO IMPROVE RELIABILITY AND MAINTAINABILITY, MINIMIZE SPARE PARTS AND INCREASE SERVICE LIFE. ALL REQUESTS FOR DEVIATION FROM THIS STANDARD MUST BE MADE IN WRITING AND WRITTEN APPROVAL RECEIVED BEFORE MODIFICATIONS ARE MADE. CONTRACTOR IS RESPONSIBLE FOR ALL COSTS NECESSARY TO RESTORE UNAUTHORIZED MODIFICATIONS.

DESIGN ENGINEER NOTE: ***THIS IS NOT A CONSTRUCTION DRAWING***

DESIGN ENGINEER SHALL REFER TO ELECTRICAL DRAWINGS, MECHANICAL DRAWINGS, AND THE HILLSBOROUGH COUNTY WATER AND WASTEWATER TECHNICAL SPECIFICATION IN ORDER TO COORDINATE THE MECHANICAL AND ELECTRICAL INSTALLATIONS. DESIGN ENGINEER SHALL NOT USE THIS DRAWING FOR A SPECIFIC SITE INSTALLATION. FOR EACH INSTALLATION A SPECIFIC SET OF CONSTRUCTION DRAWINGS AND SPECIFICATIONS (IF DEEMED NECESSARY BY THE DESIGN ENGINEER) MUST BE PREPARED IN ACCORDANCE WITH F.S. 471 AND RULES 61G.

480VAC LOAD CALCULATIONS

DESCRIPTION				AMPERES
PUMP NO.1	__HP	480VAC	3-ϕ	__AMPS
PUMP NO.2	__HP	480VAC	3-ϕ	__AMPS
PUMP NO.3	__HP	480VAC	3-ϕ	__AMPS
			MOTOR SUB TOTAL:	__AMPS
			25% OF LARGEST MOTOR:	__AMPS
			TOTAL MOTOR LOAD:	__AMPS
ODOR CONTROL SYSTEM (FUTURE)	1200W	480VAC	3-ϕ	2.5
TRANSFORMER	3KVA	480VAC	3-ϕ	6.25
			TOTAL MAXIMUM PHASE AMPERES:	__AMPS

SERVICE SIZE: ___A, 480VAC, 3ϕ, 4-WIRE, MINIMUM

KEYNOTES:

1. ELECTRICAL CONTRACTOR SHALL COORDINATE WITH TECO FOR METERING REQUIREMENTS AND SERVICE CONSTRUCTION STANDARDS (SESR-2010). WIRE IDENTIFICATION AND PHASE ARRANGEMENT SHALL BE PER NEC.
2. EQUIPMENT AND WIRE SHALL BE SIZED AND RATED ACCORDING TO THE SERVICE VOLTAGE AND RESPECTIVE PUMP SIZES AT THE STATION. REFER TO CROSS REFERENCE TABLE ON DRAWING E-1.2.
3. MD1, CB1 THRU CB5, AND CB10 SHALL BE CAPABLE OF INTERRUPTING A FAULT CURRENT OF 25,000 AIC MINIMUM.
4. REFER TO WIRE SIZE CHART E-1.2. FOR USE WITH UNGROUNDED CONDUCTORS:
   - 3/0 OR SMALLER --> #4G
   - OVER 3/0 THRU 350 --> #2G
   - OVER 350 THRU 600 --> 1/0G

   INSTALL IN 3/4"C PVC SCH-80.
5. ROUND OVER AND GRIND ALL EDGES SMOOTH TO PROTECT PERSONNEL FROM POTENTIAL INJURY.
6. ALARM STROBE SHALL BE MOUNTED 18" MINIMUM ABOVE TOP OF SURROUNDING FENCE.
7. CONTRACTOR SHALL COORDINATE INSTALLATION WITH ENGINEER/HCPU.
8. TELECOM SERVICE CONNECTION WILL BE PROVIDED ON A CASE BY CASE BASIS CONTRACTOR TO COORDINATE WITH HCPU.
9. RACK-MOUNT POWER RECEPTACLE. LOCATE AT EQUIPMENT RACK SUPPORT POST (FACING TO FRONT) AND ADJACENT TO "ME" CABINET.
10. GENERATOR TERMINATION BOX (JB4): FINAL LOCATION OF JB4 AND ASSOCIATED CONDUIT, CONDUIT ROUTING & WIRE SIZING SHALL BE DETERMINED BY THE SITE-SPECIFIC DESIGN ENGINEER.

GENERAL NOTES:

1. ALL ELECTRICAL WORK SHALL COMPLY WITH THE NEC, NESC AND LOCAL CODES INCLUDING OWNERS STANDARDS AND REQUIREMENTS.
2. ALL POWER & CONTROL CONDUCTORS SHALL BE 600V RATED THHN/THWN-2 STRANDED CU AND SIZED PER NEC.
3. ALL EXPOSED CONDUITS SHALL BE ALUMINUM THRU FIRST UNDERGROUND 90' BEND. WHERE IN CONTACT WITH CONCRETE SLAB, ALUMINUM CONDUIT SHALL BE COATED USING BITUMINOUS PAINT.
4. ALL UNDERGROUND CONDUITS SHALL BE PVC SCH-80.
5. ALL MECHANICAL CONNECTIONS SHALL BE THROUGH-BOLTED MADE WITH STAINLESS STEEL HARDWARE AND FASTENERS WHICH INCLUDE HEAVY GAUGE FLAT AND LOCK WASHERS.
6. ALL NEW PUMP STATIONS SHALL HAVE 480/277V, 3PH, 4-WIRE, 60HZ SERVICE, AS DESCRIBED IN THE COUNTY TECHNICAL SPECIFICATIONS, UNLESS OTHERWISE APPROVED BY THE COUNTY.
7. ELECTRICAL LAYOUT SUBJECT TO VARIATIONS BASED ON SPECIFIC SITE CONDITIONS, AS DETERMINED BY THE SITE-SPECIFIC DESIGN ENGINEER.
8. REFERENCE MECHANICAL DRAWINGS FOR SPECIFIC SITE DETAILS & DIMENSIONS, AND FOR COORDINATING THE INSTALLATION OF OTHER TRADES.
9. ROUTING SHOWN FOR CONDUITS AND GROUNDING CONDUCTORS ARE DIAGRAMMATIC. SITE-SPECIFIC DESIGN ENGINEER SHALL ROUTE CONDUITS AND GROUND CONDUCTORS AS FIELD CONDITIONS DICTATE UNLESS OTHERWISE NOTED.
10. GROUNDING BUSHINGS SHALL BE USED ON ALL METAL CONDUITS IN ALL ENCLOSURES.

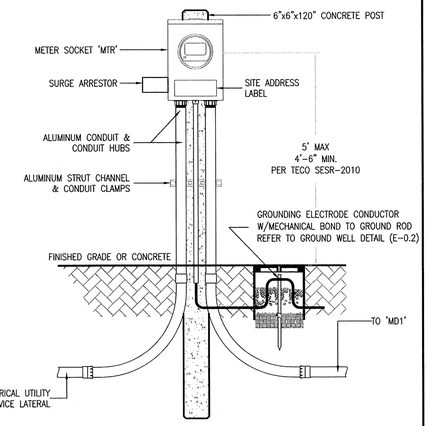

UTILITY METER DETAIL (FRONT ELEVATION)

N.T.S.

NOTES:

1. MOUNT METER TO CONCRETE POST USING ALUMINUM STRUT, UTILIZING STANDARD MOUNTING HOLES PROVIDED BY THE MANUFACTURER.
2. USE 316-SST FASTENERS AND HARDWARE.

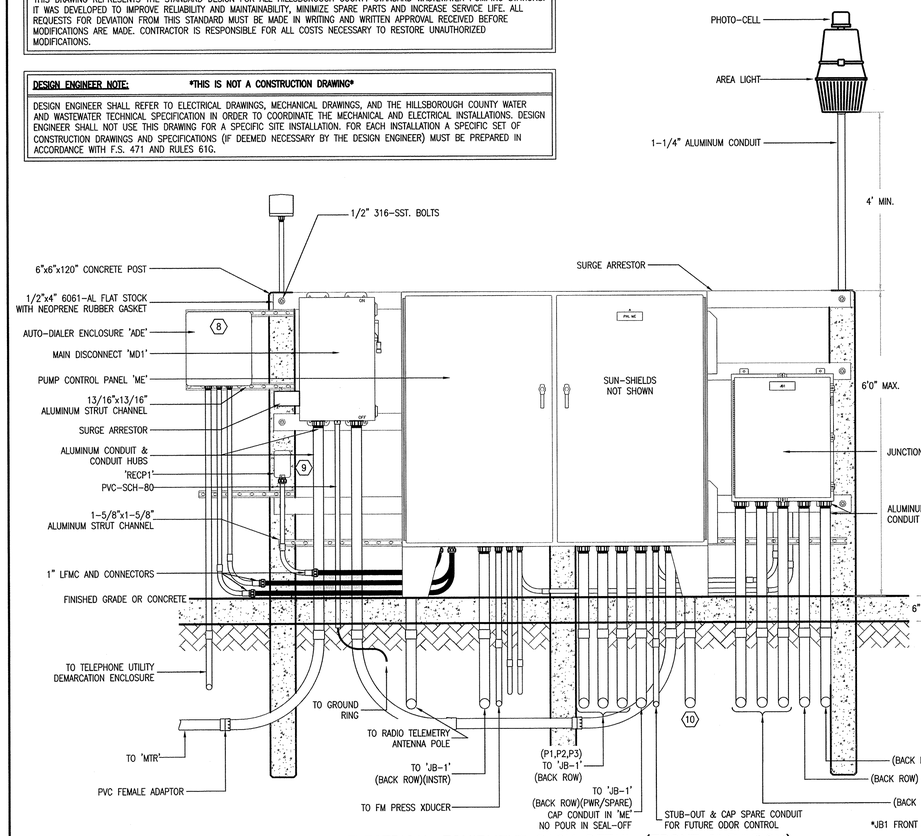

ELECTRICAL EQUIPMENT RACK DETAIL (FRONT ELEVATION)

N.T.S.

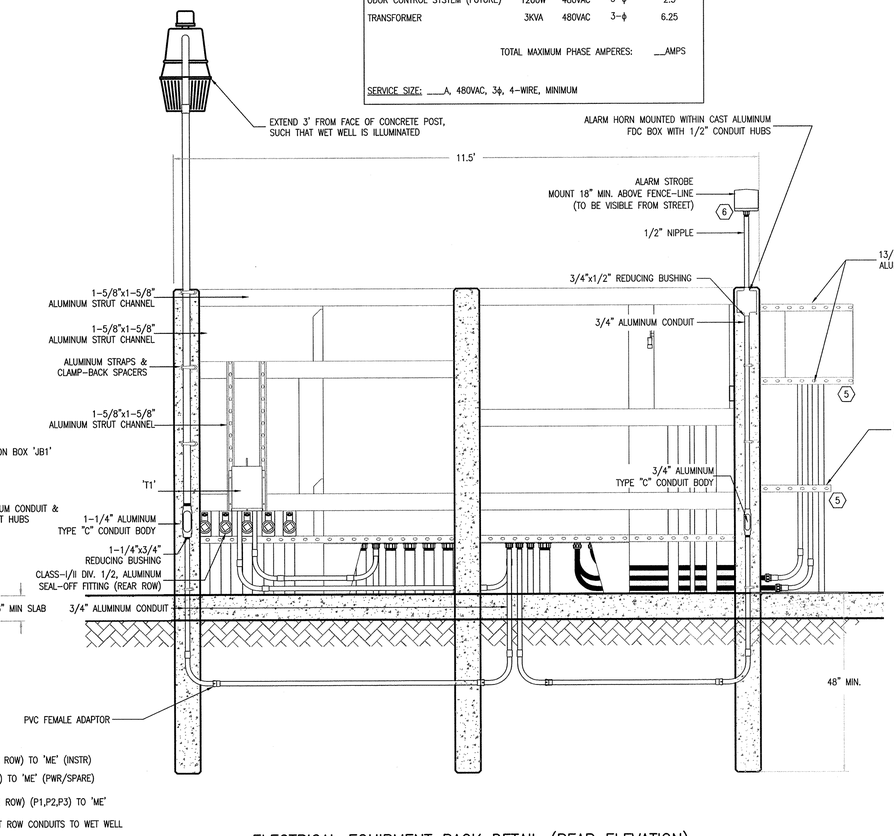

ELECTRICAL EQUIPMENT RACK DETAIL (REAR ELEVATION)

N.T.S.

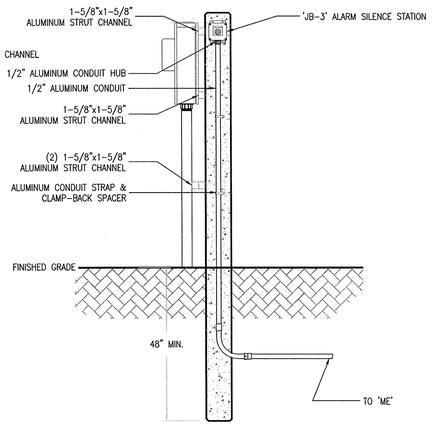

UTILITY METER DETAIL (RIGHT-SIDE ELEVATION)

N.T.S.

REV.NO.	DESCRIPTIONS	DATE
2	REVISED, TO INCORPORATE FIELD CHANGES	8/26/15
1	CONFORMED	5/17/13

REVISIONS

SEAL

SEAL

NOTE
FOR USE WITH THE FOLLOWING "ME" PKGS ONLY

3PH/480VAC/25-75HP

HILLSBOROUGH COUNTY
PUBLIC UTILITIES
ENGINEERING & ENVIRONMENTAL SERVICES GROUP
925 E. TWIGGS STREET/TAMPA FLORIDA 33602/PH. (813) 272-5977

TRIPLEX WASTEWATER PUMP STATION
ELECTRICAL, CONTROL & INSTRUMENTATION

ELECTRICAL POWER PLAN AND DETAIL

DATE:	OCTOBER 2011
PROJ. #	1179-0013
DRAWN	
DESIGNED	
CHECKED	
PROJ. MGR.	

SCALE
HORIZONTAL:
VERTICAL: NA

FILE NUMBER
DRAWING NUMBER E-0.1

STATUS: REVISED
REVISION 2

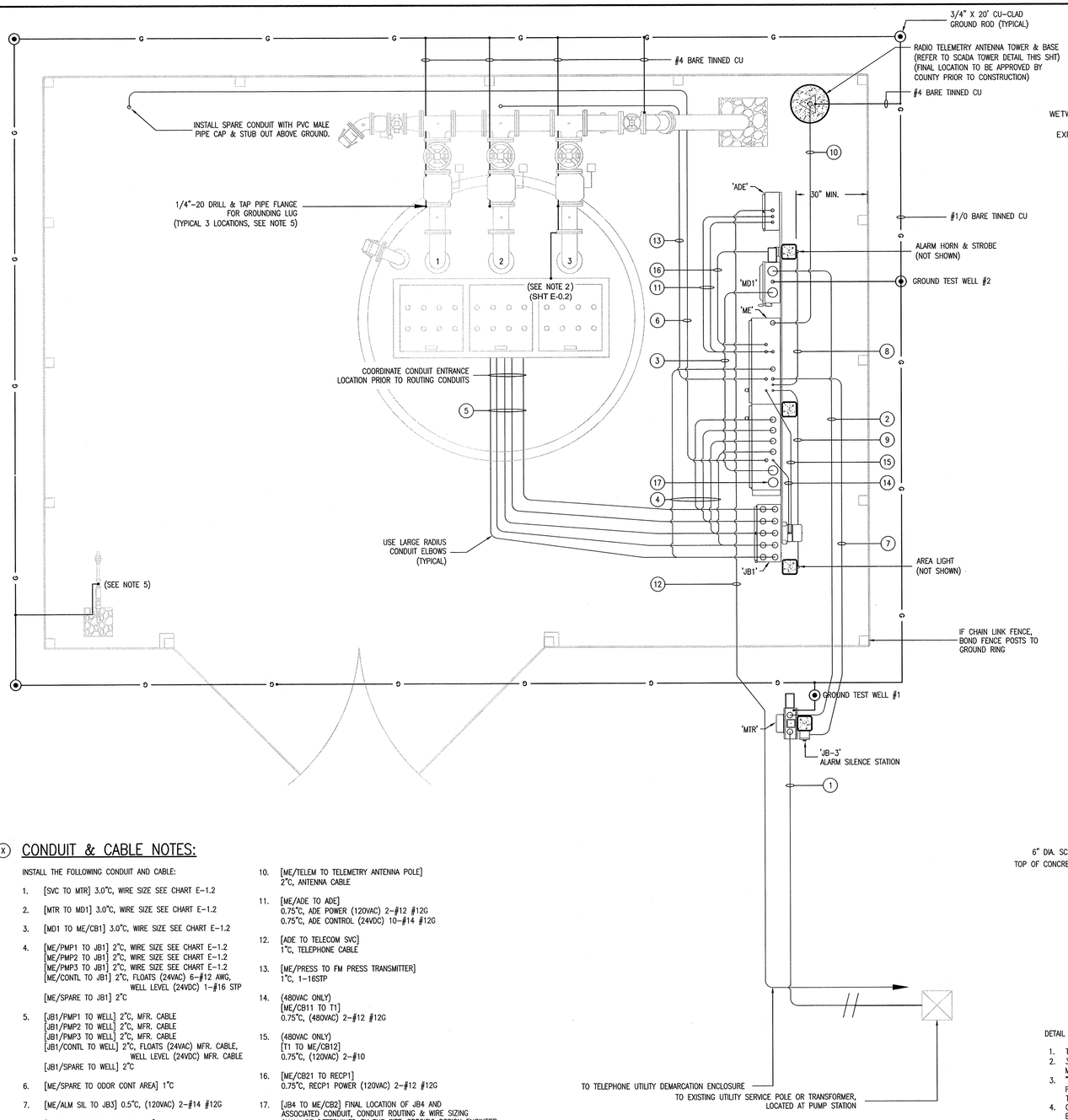

ELECTRICAL SITE PLAN
1/2" = 1'

GENERAL NOTES:

1. REFER TO GENERAL NOTES SHT. E-0.1. INCLUDING OWNER'S STANDARDS AND REQUIREMENTS.
2. GROUND CONDUCTOR AT FORCEMAIN PIPING SHALL EXTEND THROUGH SLAB VIA 1" SCH. 80 PVC CONDUIT. BOND GROUND CONDUCTOR TO PUMPS ABOVE GRADE PIPING AT CHECK VALVES FLANGE CONNECTION AND TO FORCEMAIN FLANGE CONNECTION.

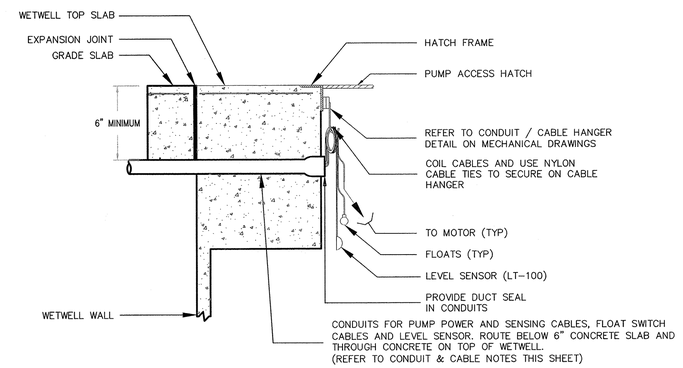

CONDUIT/CABLE DETAIL
N.T.S.

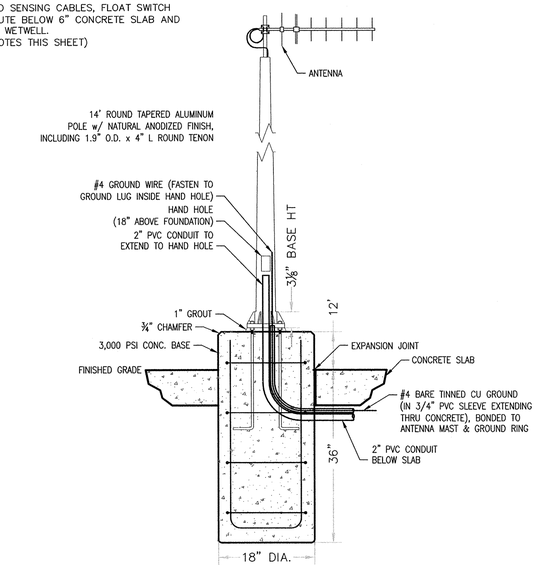

DETAIL NOTES:

1. PROVIDE ANCHORS, HARDWARE, CONCRETE SUPPORTS, ETC., AS NEEDED TO SECURE ANTENNA TOWER.
2. REFER TO MECHANICAL DRAWINGS AND SPECIFICATIONS FOR ANTENNA AND FOUNDATION DETAILS.

SCADA ANTENNA TOWER DETAIL
N.T.S.

(X) CONDUIT & CABLE NOTES:

INSTALL THE FOLLOWING CONDUIT AND CABLE:

1. [SVC TO MTR] 3.0"C, WIRE SIZE SEE CHART E-1.2
2. [MTR TO MD1] 3.0"C, WIRE SIZE SEE CHART E-1.2
3. [MD1 TO ME/CB1] 3.0"C, WIRE SIZE SEE CHART E-1.2
4. [ME/PMP1 TO JB1] 2"C, WIRE SIZE SEE CHART E-1.2
   [ME/PMP2 TO JB1] 2"C, WIRE SIZE SEE CHART E-1.2
   [ME/PMP3 TO JB1] 2"C, WIRE SIZE SEE CHART E-1.2
   [ME/CONTL TO JB1] 2"C, FLOATS (24VAC) 6-#12 AWG, WELL LEVEL (24VDC) 1-#16 STP
   [ME/SPARE TO JB1] 2"C
5. [JB1/PMP1 TO WELL] 2"C, MFR. CABLE
   [JB1/PMP2 TO WELL] 2"C, MFR. CABLE
   [JB1/PMP3 TO WELL] 2"C, MFR. CABLE
   [JB1/CONTL TO WELL] 2"C, FLOATS (24VAC) MFR. CABLE, WELL LEVEL (24VDC) MFR. CABLE
   [JB1/SPARE TO WELL] 2"C
6. [ME/SPARE TO ODOR CONT AREA] 1"C
7. [ME/ALM SIL TO JB3] 0.5"C, (120VAC) 2-#14 #12G
8. [ME/ALM STROBE-HORN TO JB2] 0.75"C, (120VAC) 4-#14 #12G
9. [ME/AREA LIGHT TO AREA LIGHT] 0.75"C, (120VAC) 3-#12 #12G
10. [ME/TELEM TO TELEMETRY ANTENNA POLE] 2"C, ANTENNA CABLE
11. [ME/ADE TO ADE] 0.75"C, ADE POWER (120VAC) 2-#12 #12G 0.75"C, ADE CONTROL (24VDC) 10-#14 #12G
12. [ADE TO TELECOM SVC] 1"C, TELEPHONE CABLE
13. [ME/PRESS TO FM PRESS TRANSMITTER] 1"C, 1-16STP
14. (480VAC ONLY) [ME/CB11 TO T1] 0.75"C, (480VAC) 2-#12 #12G
15. (480VAC ONLY) [T1 TO ME/CB12] 0.75"C, (120VAC) 2-#10
16. [ME/CB21 TO RECP1] 0.75"C, RECP1 POWER (120VAC) 2-#12 #12G
17. [JB4 TO ME/CB2] FINAL LOCATION OF JB4 AND ASSOCIATED CONDUIT, CONDUIT ROUTING & WIRE SIZING SHALL BE DETERMINED BY THE SITE-SPECIFIC DESIGN ENGINEER.

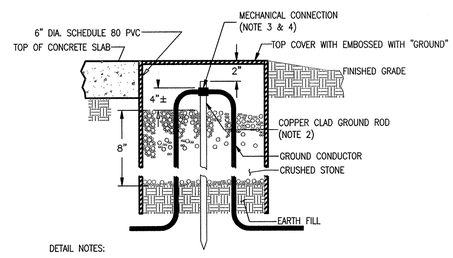

DETAIL NOTES:

1. TYPICAL FOR EACH GROUND ROD.
2. 3/4" x 20' COPPER CLAD DRIVEN GROUND ROD; THREE (3) GROUND RODS MINIMUM PER SITE.
3. "TEST WELLS" AT TECO METER & MD1 SHALL USE MECHANICAL CONNECTIONS, TO FACILITATE ISOLATING THE GROUNDING SYSTEM FROM THE UTILITY GROUND FOR TESTING PURPOSES.
4. CONTRACTOR SHALL MEASURE THE RESISTANCE OF INSTALLED GROUNDING ELECTRODES AND IF ABOVE 5 OHMS, CONTRACTOR SHALL AUGMENT THE GROUND SYSTEM AS NECESSARY.

GROUND TEST WELL DETAIL
N.T.S.

DESIGN BASIS NOTE:

THIS DRAWING REPRESENTS THE STANDARD DESIGN FOR ALL HILLSBOROUGH COUNTY STANDARD WASTEWATER PUMPING STATIONS. IT WAS DEVELOPED TO IMPROVE RELIABILITY AND MAINTAINABILITY, MINIMIZE SPARE PARTS AND INCREASE SERVICE LIFE. ALL REQUESTS FOR DEVIATION FROM THIS STANDARD MUST BE MADE IN WRITING AND WRITTEN APPROVAL RECEIVED BEFORE MODIFICATIONS ARE MADE. CONTRACTOR IS RESPONSIBLE FOR ALL COSTS NECESSARY TO RESTORE UNAUTHORIZED MODIFICATIONS.

DESIGN ENGINEER NOTE: ***THIS IS NOT A CONSTRUCTION DRAWING***

DESIGN ENGINEER SHALL REFER TO ELECTRICAL DRAWINGS, MECHANICAL DRAWINGS, AND THE HILLSBOROUGH COUNTY WATER AND WASTEWATER TECHNICAL SPECIFICATION IN ORDER TO COORDINATE THE MECHANICAL AND ELECTRICAL INSTALLATIONS. DESIGN ENGINEER SHALL NOT USE THIS DRAWING FOR A SPECIFIC SITE INSTALLATION. FOR EACH INSTALLATION A SPECIFIC SET OF CONSTRUCTION DRAWINGS AND SPECIFICATIONS (IF DEEMED NECESSARY BY THE DESIGN ENGINEER) MUST BE PREPARED IN ACCORDANCE WITH F.S. 471 AND RULES 61G.

REV.NO.	DESCRIPTIONS	DATE
2	REVISED, TO INCORPORATE FIELD CHANGES	8/26/15
1	CONFORMED	5/17/13

REVISIONS

SEAL

SEAL

NOTE
FOR USE WITH THE FOLLOWING "ME" PKGS ONLY

3PH/480VAC/25-75HP

HILLSBOROUGH COUNTY
PUBLIC UTILITIES
ENGINEERING & ENVIRONMENTAL SERVICES GROUP
925 E. TWIGGS STREET/TAMPA FLORIDA 33602/PH. (813) 272-5977

TRIPLEX WASTEWATER PUMP STATION ELECTRICAL, CONTROL & INSTRUMENTATION

ELECTRICAL SITE PLAN AND DETAIL

DATE:	OCTOBER 2011
PROJ. #	1179-0013
DRAWN	
DESIGNED	
CHECKED	
PROJ. MGR.	

SCALE
HORIZONTAL:
VERTICAL: NA

FILE NUMBER
DRAWING NUMBER
E-0.2

STATUS: REVISED
REVISION 2

NOTES:

1. REFER TO SHT. E-1.2 FOR BILL OF MATERIAL, NAMEPLATE LEGEND AND ELECTRICAL SIZING; E-1.3 THRU E-1.8 FOR SCHEMATICS.
2. WELDED CABINET DIVIDER SHALL PROVIDE COMPLETE ISOLATION BETWEEN CABINET HALVES.
3. ATTACH SUN-SHIELD WITH STAINLESS STEEL HARDWARE. TYPICAL.
4. REMOVABLE LIFTING EYE SOCKET. IMMEDIATELY AFTER CABINET INSTALLATION, INSTALL SS PLUG BOLT AND RUBBER WASHER TO PROVIDE WATER-TIGHT SEAL. TYPICAL (2).
5. INSTALL PASS-THROUGH CABLE FITTINGS AT DIVIDER PLATE (BOTTOM & CENTERED) TYP. 3 (POWER, COMM, CONTROL)

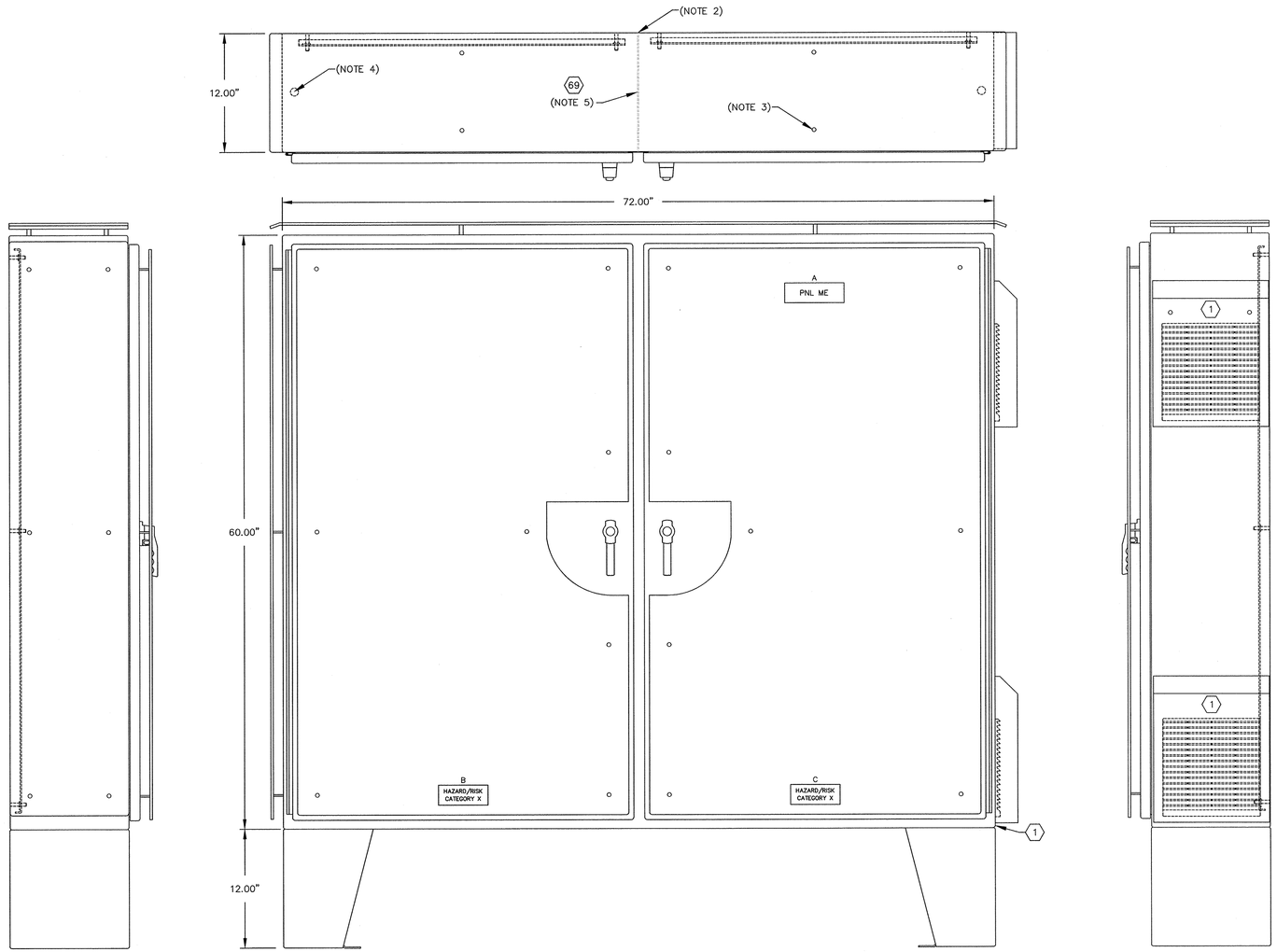

EXTERIOR ELECTRICAL/CONTROL CABINET, (ME)

5/32"=1"

REV.NO.	DESCRIPTIONS	DATE
2	REVISED, TO INCORPORATE FIELD CHANGES	8/26/15
1	CONFORMED	5/17/13

REVISIONS

SEAL

SEAL

HILLSBOROUGH COUNTY
PUBLIC UTILITIES
ENGINEERING & ENVIRONMENTAL SERVICES GROUP
925 E. TWIGGS STREET/TAMPA FLORIDA 33602/PH. (813) 272-5977

TRIPLEX WASTEWATER PUMP STATION
ELECTRICAL, CONTROL & INSTRUMENTATION

ELECTRICAL/CONTROL ENCLOSURE
EXTERIOR LAYOUT
(3PH)(480V/25HP)

DATE: OCTOBER 2011
PROJ. # 1179-0013
DRAWN
DESIGNED
CHECKED
PROJ. MGR.

SCALE
HORIZONTAL:
VERTICAL:
NA

FILE NUMBER
DRAWING NUMBER
E-1.0

STATUS: REVISED
REVISION 2

NOTES:

1. REFER TO SHT. E-1.2 FOR BILL OF MATERIAL, NAMEPLATE LEGEND AND ELECTRICAL SIZING; E-1.3 THRU E-1.8 FOR SCHEMATICS.
2. INSTALL STAND-OFF BRACKETS AS REQ'D TO EXTEND CIRCUIT BREAKERS TO INNER DOOR.

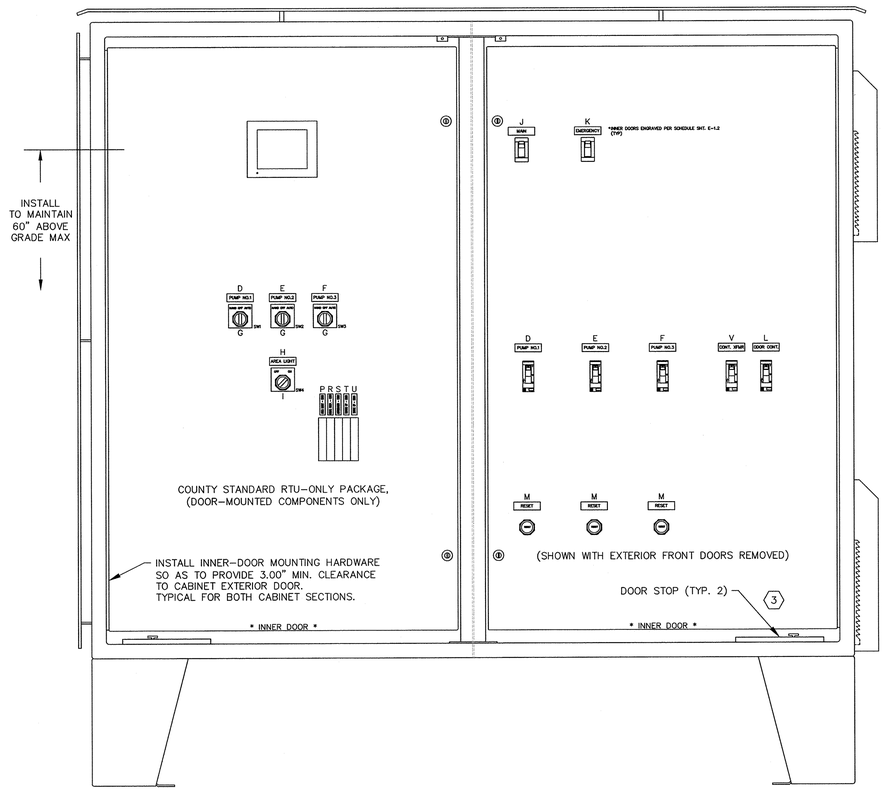

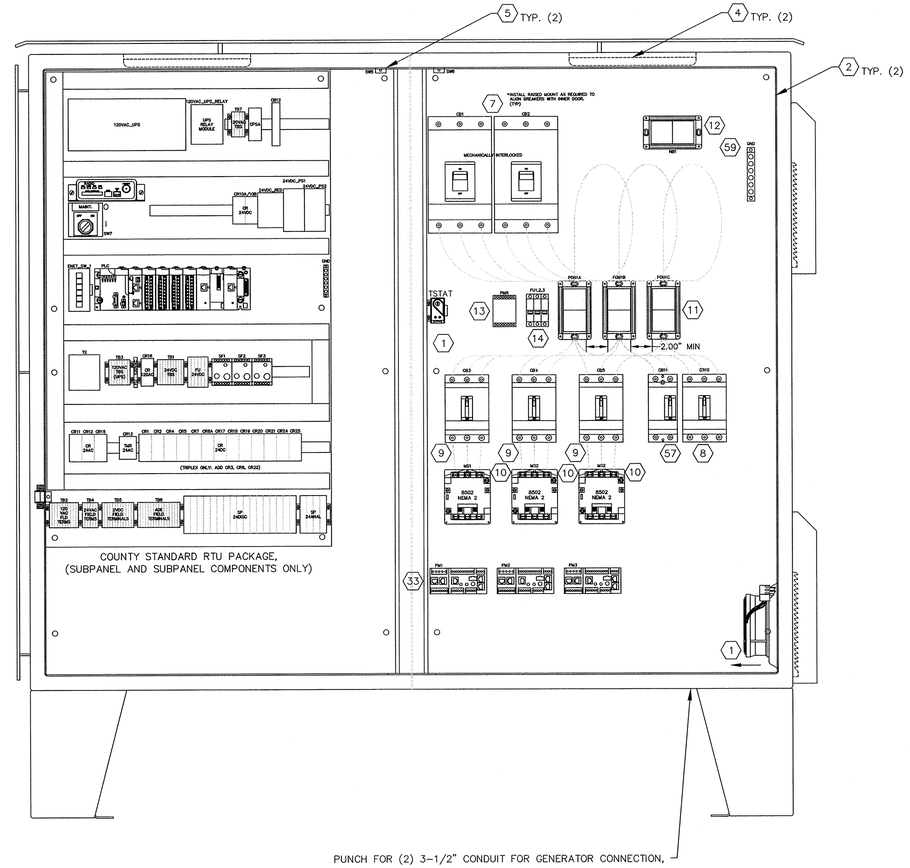

INTERIOR ELECTRICAL/CONTROL CABINET, (ME)

5/32"=1"

REV.NO.	DESCRIPTIONS	DATE
2	REVISED, TO INCORPORATE FIELD CHANGES	8/26/15
1	CONFORMED	5/17/13

REVISIONS

SEAL

SEAL

HILLSBOROUGH COUNTY
PUBLIC UTILITIES
ENGINEERING & ENVIRONMENTAL SERVICES GROUP
925 E. TWIGGS STREET/TAMPA FLORIDA 33602/PH. (813) 272-5977

TRIPLEX WASTEWATER PUMP STATION
ELECTRICAL, CONTROL & INSTRUMENTATION

ELECTRICAL/CONTROL ENCLOSURE
INTERIOR LAYOUT
(3PH)(480V/25HP)

DATE: OCTOBER 2011
PROJ. # 1179-0013
DRAWN
DESIGNED
CHECKED
PROJ. MGR.

SCALE
HORIZONTAL:
VERTICAL:
NA

FILE NUMBER
DRAWING NUMBER
E-1.1

STATUS: REVISED
REVISION 2

LIST OF MAJOR COMPONENTS

ELECTRICAL/CONTROL CABINET (ME)

ITEM NO.	QTY	DEVICE ID	MANUFACTURER	PART NO.	DESCRIPTION
1	1		HOFFMAN	A60H72128SSLP-3PT (CUSTOM)	ENCLOSURE, 60"Hx72"Wx12"D, TWO-DOOR, WELDED CABINET DIVIDER, NEMA 4X, 304 SS, 3-PT LATCHES, SUN-SHIELDS, EPOXY WHITE FINISH, FLOOR STANDS INNER-DOOR BOTH SIDES: 55"Hx33"W, ALUMINUM 0.125" THICK MIN., POWDER-COAT IRON GRAY TEXTURE FINISH (HBT2-C0009-C50)
	1		PFANNENBERG	FLZ 530-1712000010	THERMOSTAT, 120VAC
	1		PFANNENBERG	PF 43000-11643154055	CABINET FAN, UL TYPE 12, 162/133 CFM, 115V, 50/60 HZ, W/FILTER
	1		PFANNENBERG	PFA 40000-11740004055	CABINET EXHAUST FILTER
	2		PFANNENBERG	PF-RH-40000-18102000017	WASHDOWN SHROUD, SS
	2		HOFFMAN	AS350SS	HOLE SEAL 3.50", 300 SERIES SS, WEATHER-PROOF, EPOXY WHITE FINISH
2	2		HOFFMAN	(CUSTOM)	SUBPANEL, 57"Hx33"W, 304SS, EPOXY WHITE FINISH
	1				COUNTY STANDARD RTU-ONLY PKG, SUBPANEL AND SUBPANEL COMPONENTS ONLY
3	2		FABTECH	NH-45013	DOOR STOP KIT, 316 SS
4	2		GE	UCF18/DW/ADV-16547	CABINET LIGHT, FLUORESCENT
	2		GE	F15T8/WW-10147	CABINET LIGHT, BULB
5	2	SW5, SW6	SQUARE-D	9007-AP221	DOOR SWITCH
6					*NOT USED
7	2	CB1, CB2	SEE CHART THIS SHT.		
			SQUARE-D	JJL36250U31X	CIRCUIT BREAKER, 600V, 3 POLE, 250 AMP, ELECTRONIC TRIP (MICROLOGIC), MECH-INTERLOCK
8	1	CB10	SQUARE-D	HGL36020T	CIRCUIT BREAKER, MOLDED-CASE, 600V, 3 POLE, 20 AMP TRIP UNIT
9	3	CB3, CB4, CB5	SEE CHART THIS SHT.		
			SQUARE-D	HGL36070T	CIRCUIT BREAKER, MOLDED-CASE, 600V, 3 POLE, 70 AMP TRIP UNIT
10	3	MS1, MS2, MS3	SEE CHART THIS SHT.		
			SQUARE-D	8502-SDO2-V02S	CONTACTOR, 3 POLE, SIZE 2, 45A CONT.
11	3	PDB1A,B,C	BUSSMANN	16528-1	POWER DISTRIBUTION BLK, 3 POLE, 840A, 600VAC, PRIM: 2 CONN 2-600KCMIL CU, SEC: 4 CONN 14-4 & 4 CONN 6-3/0 CU
12	1	NB1	BUSSMANN	16528-1	POWER DISTRIBUTION BLK, 3 POLE, 840A, 600VAC, PRIM: 2 CONN 2-600KCMIL CU, SEC: 4 CONN 14-4 & 4 CONN 6-3/0 CU
13	1	PMR	MACROMATIC	PMPU	PHASE MONITOR RELAY
	1		SQUARE-D	8501NR51	RELAY BASE
14	1	FU1,FU2,FU3	SQUARE-D	DFCC3V	3 POLE FUSE HOLDER
	3		BUSSMANN	LP-CC-1	1 AMP CLASS CC FUSE
15					*NOT USED
16					*NOT USED
17					*NOT USED
18					*NOT USED
19					*NOT USED
20					*NOT USED
21					*NOT USED
22					*NOT USED
23					*NOT USED
24					*NOT USED
25					*NOT USED
26					*NOT USED
27					*NOT USED
28					*NOT USED
29					*NOT USED
30					*NOT USED
31					*NOT USED
32					*NOT USED
33	3	PM1, PM2, PM3	SQUARE-D	LTMR100EBD	TSYS-T, CONTROLLER
	3		SQUARE-D	LTMEV40BD	TSYS-T, EXTENSION MODULE
	3		SQUARE-D	LTMCC004	TSYS-T, CONNECTOR
	3		SQUARE-D	9001SKR1BH5	PUSH BUTTON, N.O. CONTACT
34					*NOT USED
35					*NOT USED
36					*NOT USED
37					*NOT USED
38					*NOT USED
39					*NOT USED
40	1	RECP1	HUBBELL	GFTR15GY	RECEPTACLE, 125VAC, DUPLEX, GFCI, 15A, 10kA SCCR
	1		THOMAS & BETTS	IH3-2-LM	RECEPTACLE BOX, DIE-CAST ALUMINUM, WEATHERPROOF, (3) 3/4" HOLES
	1		INTERMATIC	WP1010MD	RECEPTACLE COVER, DIE-CAST ALUMINUM, WEATHERPROOF, WHILE-IN-USE
43					*NOT USED
44	1		FEDERAL SIGNAL	141ST-24R	STROBE LIGHT, RED, 24VDC (REMOTE FROM ME)
45	1		FEDERAL SIGNAL	450E-24-31 w/WB	ALARM HORN, 24VDC, w/ALUMINUM WP HOUSING (REMOTE FROM ME)
46					*NOT USED
47					*NOT USED
48					*NOT USED
49					*NOT USED
50					*NOT USED
51					*NOT USED
52					*NOT USED
53					*NOT USED
54					*NOT USED
55					*NOT USED
56					*NOT USED
57	1	CB11	SQUARE-D	HGL26015	CIRCUIT BREAKER, MOLDED-CASE, 600V, 2 POLE, 15 AMP
58	1	T1	SQUARE-D	3S1FSS	3kVA 480VAC - 120VAC SINGLE PHASE TRANSFORMER W/ ENCLOSURE
59	1		SQUARE-D	PK0GTA6	GROUND BAR, 6 CONN 14-1/0 CU
60					*NOT USED
61					*NOT USED
62					*NOT USED
63					*NOT USED
64					
65					
66					
67					
68					*NOT USED
69	1		HUBBELL	ZS105	CABLE FITTING, PASS-THROUGH (POWER)
	1		HUBBELL	ZS108	CABLE FITTING, PASS-THROUGH (COMMUNICATION)
	1		HUBBELL	ZS210	CABLE FITTING, PASS-THROUGH (CONTROL)
70					*NOT USED

NAMEPLATE SCHEDULE

ELECTRICAL/CONTROL CABINET (ME)

NP. NO.	QTY	PLATE COLOR/SIZE	LTR COLOR/SIZE	ENGRAVING (LINE1/LINE2/ETC.)
A	1	BLK / 2.00" H x 6.00" W	WHT / 1/2"	PNL,ME
B	1	BLK / 2.00" H x 5.00" W	WHT / 3/8"	HAZARD/RISK / CATEGORY X
C	1	BLK / 2.00" H x 5.00" W	WHT / 3/8"	HAZARD/RISK / CATEGORY X
D	2	ENG / 0.75" H x 2.50" W	ENG / 1/4"	PUMP NO.1
E	2	ENG / 0.75" H x 2.50" W	ENG / 1/4"	PUMP NO.2
F	2	ENG / 0.75" H x 2.50" W	ENG / 1/4"	PUMP NO.3
G	3	ENG / 2.25" H x 2.25" W	ENG / 3/16"	HAND OFF AUTO
H	1	ENG / 0.75" H x 2.50" W	ENG / 1/4"	AREA LIGHT
I	2	ENG / 2.25" H x 2.25" W	ENG / 3/16"	OFF ON
J	1	ENG / 0.75" H x 2.50" W	ENG / 1/4"	MAIN - CB1
K	1	ENG / 0.75" H x 2.50" W	ENG / 1/4"	EMERGENCY - CB2
L	1	ENG / 0.75" H x 2.50" W	ENG / 1/4"	ODOR CONT - CB10
M	3	ENG / 0.75" H x 2.50" W	ENG / 1/4"	RESET
N				*NOT USED
O	1	ENG / 0.75" H x 2.50" W	ENG / 1/4"	MAINT.
P	1	ENG / 0.50" H x 2.00" W	ENG / 3/16"	AREA LIGHT - CB20
R	1	ENG / 0.50" H x 2.00" W	ENG / 3/16"	CONV. RECP. - CB21
S	1	ENG / 0.50" H x 2.00" W	ENG / 3/16"	AUTODIALER - CB22
T	1	ENG / 0.50" H x 2.00" W	ENG / 3/16"	120VAC CONTROL POWER - CB23
U	1	ENG / 0.50" H x 2.00" W	ENG / 3/16"	24VAC CONTROL POWER - CB24
V	1	ENG / 0.75" H x 2.50" W	ENG / 1/4"	CONTROL - CB11
W				*NOT USED

CROSS REFERENCE TABLE

SERVICE VOLTAGE	PUMP HP	PUMP FLA (PER NEC)	MTR–MD1 (AWG)	MD1–CB1/N J1/JB4–CB2/N (AWG)	CB1–PDB1 CB2–PDB1 (AWG)	MD1 CB1 CB2 SETTINGS J (Ir/tr/Ii)	GENERATOR CONNECTION	PDB1–PMR (AWG)	CB3 CB4 CB5 (MAX)	MS1 MS2 MS3	PDB1–CB3 PDB1–CB4 PDB1–CB5 CB3–MS1 CB4–MS2 CB5–MS3 MS1–JB1 MS2–JB1 MS3–JB1 (AWG)	JB1–M1 JB1–M2 JB1–M3	ODOR CONTROL CB10 (MAX)	PDB1–CB10 (AWG)	PDB1–CB20 (AWG)	PDB1–CB11 CB11–XFMR1 (AWG)	CB11
480VAC, 3PH, 4W	25	34.0	3–#2/0, 1–#2 N	3–#2/0, 1–#2 N, 1–#6 G	3–#2/0	J250(175/16/8)	INTEGRATED	3–#14	H70	SIZE 2	3–#4	PER MANUF	H20	3–#12	--	2–#10	H15

EQUIPMENT AND CONDUCTORS SHALL COMPLY WITH NEC AND ALL OTHER APPLICABLE CODES, INCLUDING EXISTING COUNTY STANDARDS.

DESIGN BASIS NOTE:

THIS DRAWING REPRESENTS THE STANDARD DESIGN FOR ALL HILLSBOROUGH COUNTY STANDARD WASTEWATER PUMPING STATIONS. IT WAS DEVELOPED TO IMPROVE RELIABILITY AND MAINTAINABILITY, MINIMIZE SPARE PARTS AND INCREASE SERVICE LIFE. ALL REQUESTS FOR DEVIATION FROM THIS STANDARD MUST BE MADE IN WRITING AND WRITTEN APPROVAL RECEIVED BEFORE MODIFICATIONS ARE MADE. CONTRACTOR IS RESPONSIBLE FOR ALL COSTS NECESSARY TO RESTORE UNAUTHORIZED MODIFICATIONS.

DESIGN ENGINEER NOTE: *THIS IS NOT A CONSTRUCTION DRAWING*

DESIGN ENGINEER SHALL REFER TO ELECTRICAL DRAWINGS, MECHANICAL DRAWINGS, AND THE HILLSBOROUGH COUNTY WATER AND WASTEWATER TECHNICAL SPECIFICATION IN ORDER TO COORDINATE THE MECHANICAL AND ELECTRICAL INSTALLATIONS. DESIGN ENGINEER SHALL NOT USE THIS DRAWING FOR A SPECIFIC SITE INSTALLATION. FOR EACH INSTALLATION A SPECIFIC SET OF CONSTRUCTION DRAWINGS AND SPECIFICATIONS (IF DEEMED NECESSARY BY THE DESIGN ENGINEER) MUST BE PREPARED IN ACCORDANCE WITH F.S. 471 AND RULES 61G.

REV. NO.	DESCRIPTION	DATE
2	REVISED, TO INCORPORATE FIELD CHANGES	8/26/15
1	CONFORMED	5/17/13

SEAL

SEAL

HILLSBOROUGH COUNTY
PUBLIC UTILITIES
ENGINEERING & ENVIRONMENTAL SERVICES GROUP
625 E. TWIGGS STREET/TAMPA FLORIDA 33602/PH. (813) 272-5977

TRIPLEX WASTEWATER PUMP STATION ELECTRICAL, CONTROL & INSTRUMENTATION

ELECTRICAL/CONTROL ENCLOSURE BILL OF MATERIAL & EQUIP SIZING CHART (3PH)(480V/25HP)

DATE: OCTOBER 2011
PROJ. # 1179-0013
DRAWN
DESIGNED
CHECKED
PROJ. MGR.

SCALE
HORIZONTAL:
VERTICAL: NA

FILE NUMBER
DRAWING NUMBER
E-1.2

STATUS: REVISED
REVISION 2

ELECTRICAL/CONTROL CABINET, (ME)

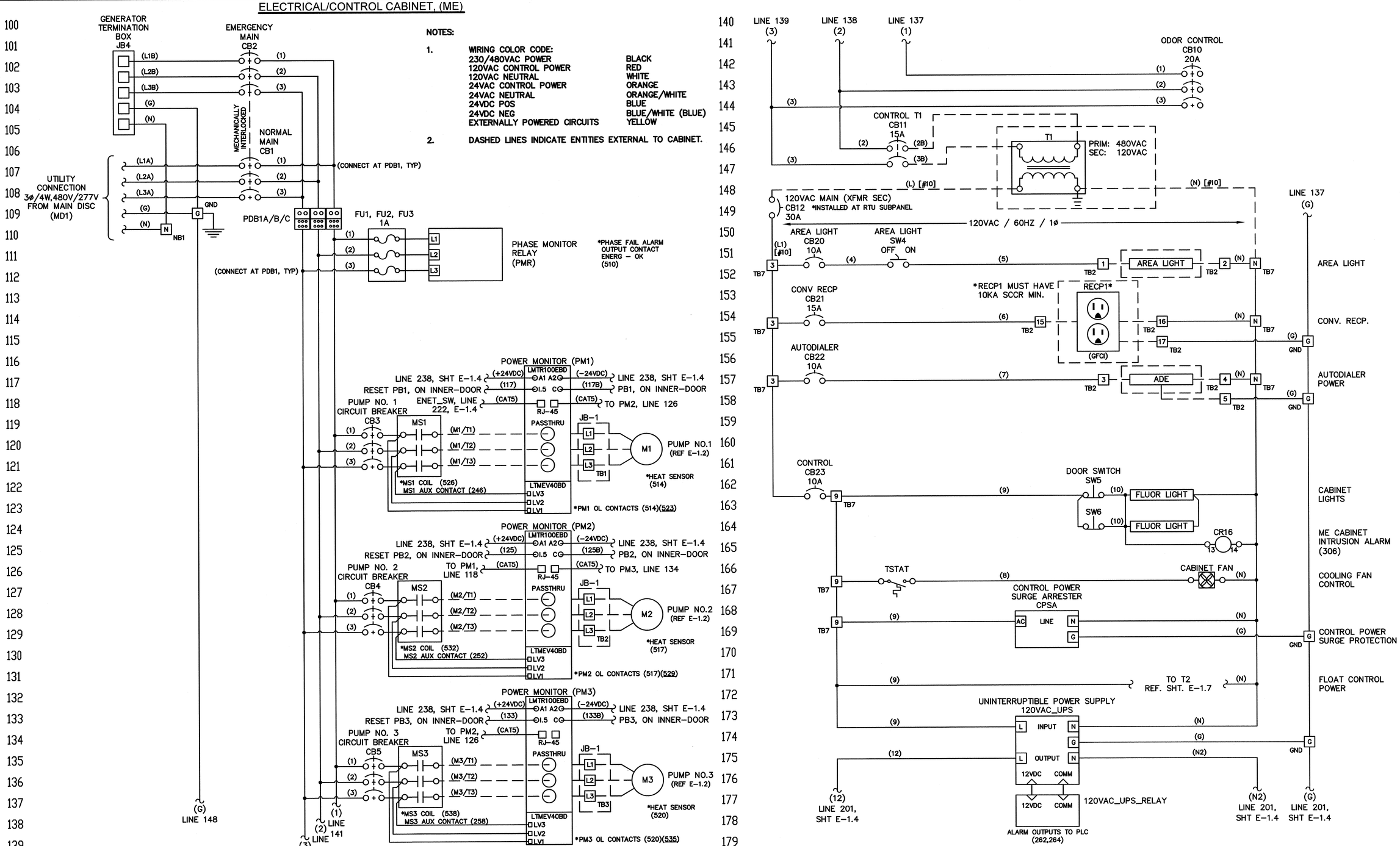

NOTES:

1. WIRING COLOR CODE:

230/480VAC POWER	BLACK
120VAC CONTROL POWER	RED
120VAC NEUTRAL	WHITE
24VAC CONTROL POWER	ORANGE
24VAC NEUTRAL	ORANGE/WHITE
24VDC POS	BLUE
24VDC NEG	BLUE/WHITE (BLUE)
EXTERNALLY POWERED CIRCUITS	YELLOW

2. DASHED LINES INDICATE ENTITIES EXTERNAL TO CABINET.

REV.NO.	DESCRIPTION	DATE
2	REVISED, TO INCORPORATE FIELD CHANGES	8/28/15
1	CONFORMED	5/17/13

SEAL

SEAL

HILLSBOROUGH COUNTY
PUBLIC UTILITIES
ENGINEERING & ENVIRONMENTAL SERVICES GROUP
925 E. TWIGGS STREET/TAMPA FLORIDA 33602/PH. (813) 272-5977

TRIPLEX WASTEWATER PUMP STATION ELECTRICAL, CONTROL & INSTRUMENTATION

ELECTRICAL/CONTROL ENCLOSURE ELECTRICAL SCHEMATICS (3PH)(480V/25HP)

DATE:	OCTOBER 2011
PROJ. #	1179-0013
DRAWN	
DESIGNED	
CHECKED	
PROJ. MGR.	

SCALE
HORIZONTAL:
VERTICAL: NA

FILE NUMBER
DRAWING NUMBER
E-1.3

STATUS: REVISED
REVISION 2

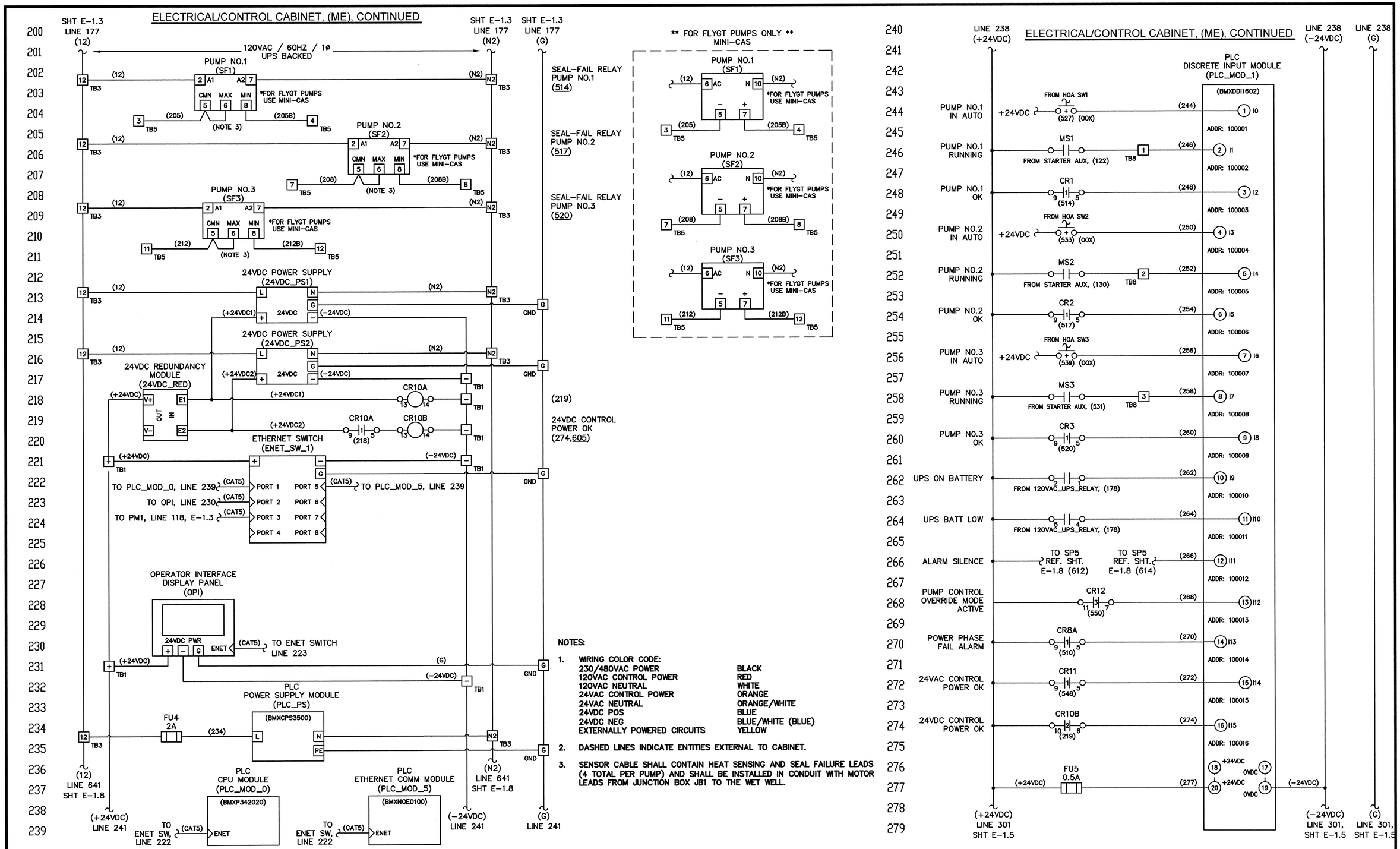

NOTES:

1. WIRING COLOR CODE:

230/480VAC POWER	BLACK
120VAC CONTROL POWER	RED
120VAC NEUTRAL	WHITE
24VAC CONTROL POWER	ORANGE
24VAC NEUTRAL	ORANGE/WHITE
24VDC POS	BLUE
24VDC NEG	BLUE/WHITE (BLUE)
EXTERNALLY POWERED CIRCUITS	YELLOW

2. DASHED LINES INDICATE ENTITIES EXTERNAL TO CABINET.
3. SENSOR CABLE SHALL CONTAIN HEAT SENSING AND SEAL FAILURE LEADS (4 TOTAL PER PUMP) AND SHALL BE INSTALLED IN CONDUIT WITH MOTOR LEADS FROM JUNCTION BOX JB1 TO THE WET WELL.

REV.NO.	DESCRIPTION OF REVISIONS	DATE
2	REVISED, TO INCORPORATE FIELD CHANGES	8/28/15
1	CONFORMED	5/17/13

SEAL

SEAL

HILLSBOROUGH COUNTY
PUBLIC UTILITIES
ENGINEERING & ENVIRONMENTAL SERVICES GROUP
925 E. TWIGGS STREET/TAMPA FLORIDA 33602/PH. (813) 272-5977

TRIPLEX WASTEWATER PUMP STATION ELECTRICAL, CONTROL & INSTRUMENTATION

ELECTRICAL/CONTROL ENCLOSURE ELECTRICAL SCHEMATICS (3PH)(480V/25HP)

DATE:	OCTOBER 2011
PROJ. #	1179-0013
DRAWN	
DESIGNED	
CHECKED	
PROJ. MGR.	

SCALE
HORIZONTAL:
VERTICAL:
NA

FILE NUMBER
DRAWING NUMBER
E-1.4

STATUS: REVISED
REVISION 2

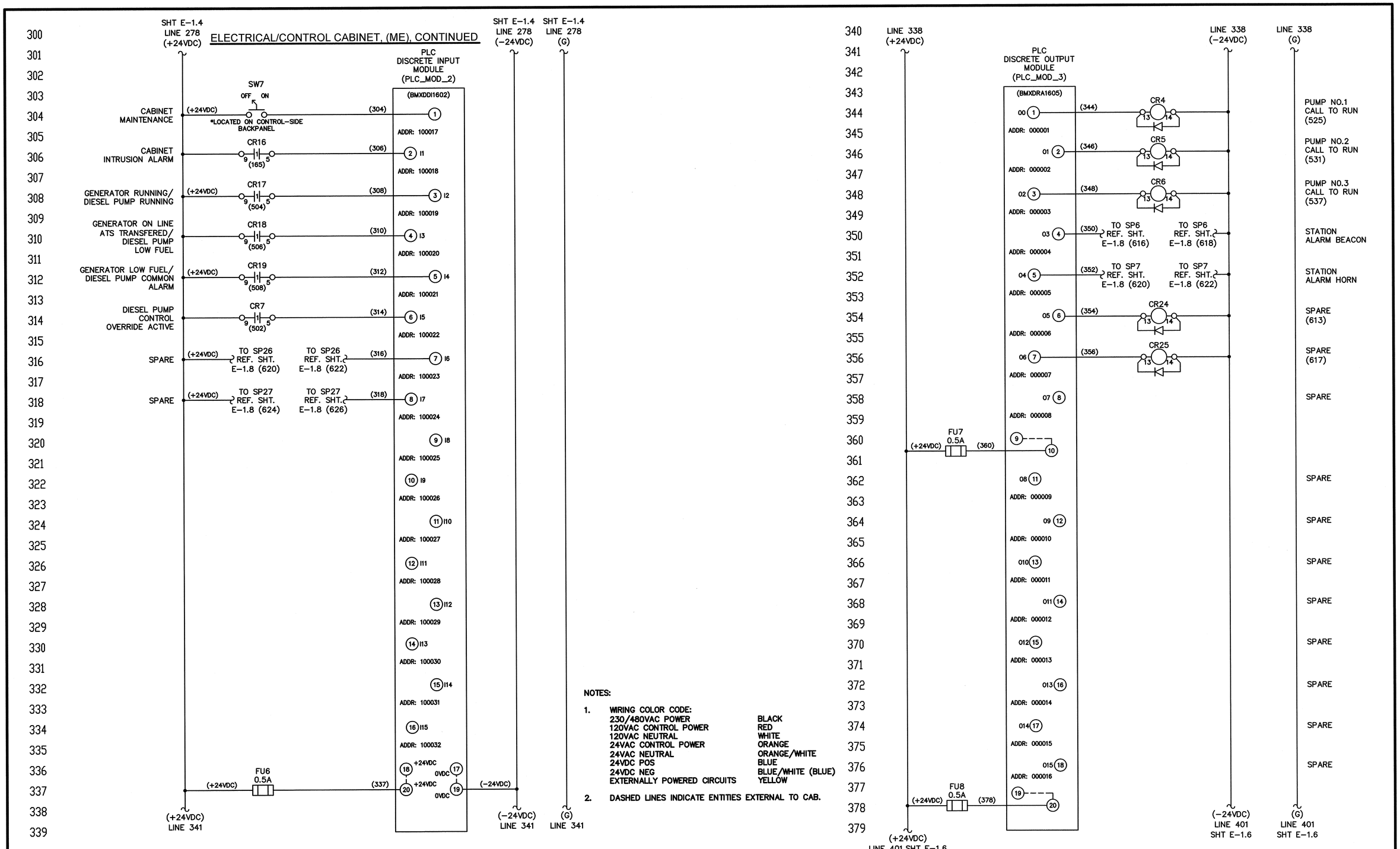
ELECTRICAL/CONTROL CABINET, (ME), CONTINUED
SHT E-1.4 LINE 278 (+24VDC)
SHT E-1.4 LINE 278 (-24VDC)
SHT E-1.4 LINE 278 (G)
PLC DISCRETE INPUT MODULE (PLC_MOD_2)
(BMXDDI1602)
SW7
OFF ON
*LOCATED ON CONTROL-SIDE BACKPANEL
CABINET MAINTENANCE
CABINET INTRUSION ALARM
GENERATOR RUNNING/ DIESEL PUMP RUNNING
GENERATOR ON LINE ATS TRANSFERED/ DIESEL PUMP LOW FUEL
GENERATOR LOW FUEL/ DIESEL PUMP COMMON ALARM
DIESEL PUMP CONTROL OVERRIDE ACTIVE
SPARE
SPARE
CR16
CR17
CR18
CR19
CR7
TO SP26 REF. SHT. E-1.8 (620)
TO SP26 REF. SHT. E-1.8 (622)
TO SP27 REF. SHT. E-1.8 (624)
TO SP27 REF. SHT. E-1.8 (626)
FU6 0.5A
(+24VDC) LINE 341
(-24VDC) LINE 341
(G) LINE 341
NOTES:
1. WIRING COLOR CODE:
230/480VAC POWER BLACK
120VAC CONTROL POWER RED
120VAC NEUTRAL WHITE
24VAC CONTROL POWER ORANGE
24VAC NEUTRAL ORANGE/WHITE
24VDC POS BLUE
24VDC NEG BLUE/WHITE (BLUE)
EXTERNALLY POWERED CIRCUITS YELLOW
2. DASHED LINES INDICATE ENTITIES EXTERNAL TO CAB.
LINE 338 (+24VDC)
LINE 338 (-24VDC)
LINE 338 (G)
PLC DISCRETE OUTPUT MODULE (PLC_MOD_3)
(BMXDRA1605)
CR4
CR5
CR6
CR24
CR25
TO SP6 REF. SHT. E-1.8 (616)
TO SP6 REF. SHT. E-1.8 (618)
TO SP7 REF. SHT. E-1.8 (620)
TO SP7 REF. SHT. E-1.8 (622)
FU7 0.5A
FU8 0.5A
(+24VDC) LINE 401,SHT E-1.6
(-24VDC) LINE 401 SHT E-1.6
(G) LINE 401 SHT E-1.6
PUMP NO.1 CALL TO RUN (525)
PUMP NO.2 CALL TO RUN (531)
PUMP NO.3 CALL TO RUN (537)
STATION ALARM BEACON
STATION ALARM HORN
SPARE (613)
SPARE (617)
SPARE
REVISED TO INCORPORATE FIELD CHANGES 8/28/15
CONFORMED 5/17/13
HILLSBOROUGH COUNTY
PUBLIC UTILITIES
ENGINEERING & ENVIRONMENTAL SERVICES GROUP
TRIPLEX WASTEWATER PUMP STATION
ELECTRICAL, CONTROL & INSTRUMENTATION
ELECTRICAL/CONTROL ENCLOSURE
ELECTRICAL SCHEMATICS
(3PH)(480V/25HP)
DATE: OCTOBER 2011
PROJ. # 1179-0013
DRAWN
DESIGNED
CHECKED
PROJ. MGR.
SCALE
HORIZONTAL:
VERTICAL: NA
E-1.5
STATUS: REVISED
REVISION 2

ELECTRICAL/CONTROL CABINET, (ME), CONTINUED

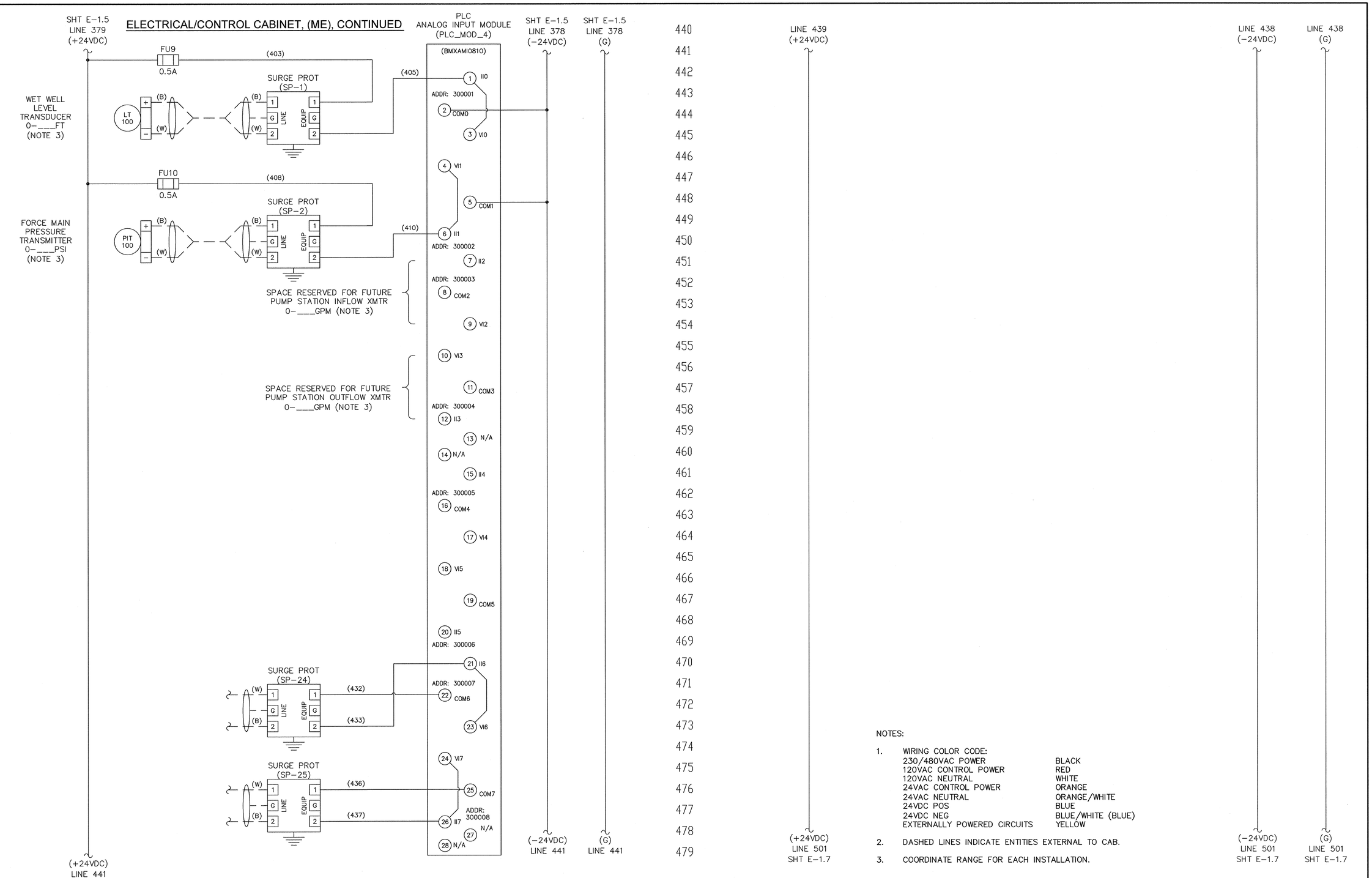

NOTES:

1. WIRING COLOR CODE:

230/480VAC POWER	BLACK
120VAC CONTROL POWER	RED
120VAC NEUTRAL	WHITE
24VAC CONTROL POWER	ORANGE
24VAC NEUTRAL	ORANGE/WHITE
24VDC POS	BLUE
24VDC NEG	BLUE/WHITE (BLUE)
EXTERNALLY POWERED CIRCUITS	YELLOW

2. DASHED LINES INDICATE ENTITIES EXTERNAL TO CAB.
3. COORDINATE RANGE FOR EACH INSTALLATION.

REV.NO.	DESCRIPTIONS	DATE
2	REVISED, TO INCORPORATE FIELD CHANGES	8/26/15
1	CONFORMED	5/17/13

REVISIONS

SEAL

SEAL

HILLSBOROUGH COUNTY
PUBLIC UTILITIES
ENGINEERING & ENVIRONMENTAL SERVICES GROUP
925 E. TWIGGS STREET/TAMPA FLORIDA 33602/PH. (813) 272-5977

TRIPLEX WASTEWATER PUMP STATION
ELECTRICAL, CONTROL & INSTRUMENTATION

ELECTRICAL/CONTROL ENCLOSURE
ELECTRICAL SCHEMATICS
(3PH)(480V/25HP)

DATE:	OCTOBER 2011
PROJ. #	1179-0013
DRAWN	
DESIGNED	
CHECKED	
PROJ. MGR.	

SCALE
HORIZONTAL:
VERTICAL: NA

FILE NUMBER
DRAWING NUMBER
E-1.6

STATUS: REVISED
REVISION 2

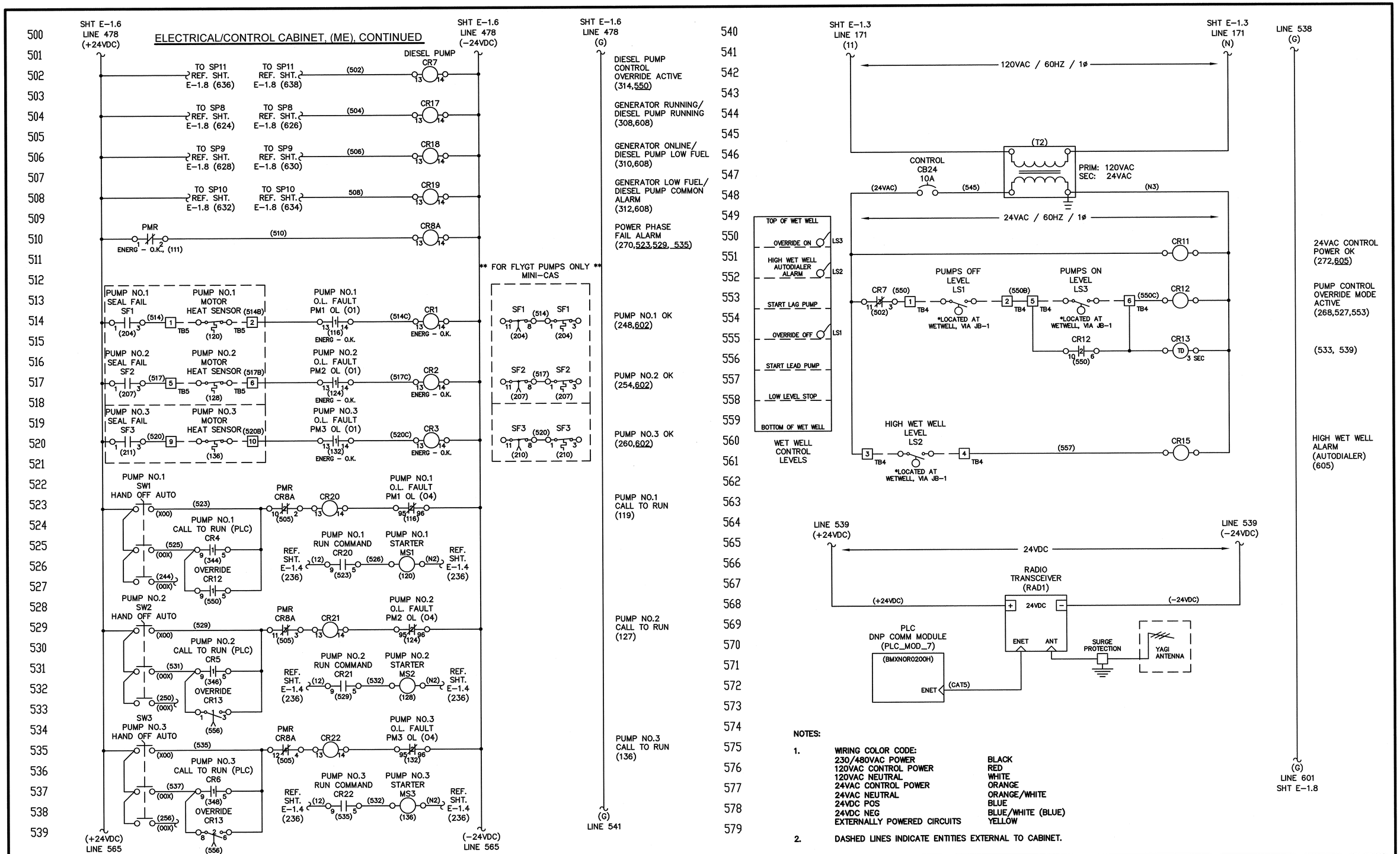

NOTES:

1. WIRING COLOR CODE:

230/480VAC POWER	BLACK
120VAC CONTROL POWER	RED
120VAC NEUTRAL	WHITE
24VAC CONTROL POWER	ORANGE
24VAC NEUTRAL	ORANGE/WHITE
24VDC POS	BLUE
24VDC NEG	BLUE/WHITE (BLUE)
EXTERNALLY POWERED CIRCUITS	YELLOW

2. DASHED LINES INDICATE ENTITIES EXTERNAL TO CABINET.

REV. NO.	REVISIONS	DATE
2	REVISED, TO INCORPORATE FIELD CHANGES	6/26/15
1	CONFORMED	6/17/13

SEAL

SEAL

HILLSBOROUGH COUNTY
PUBLIC UTILITIES
ENGINEERING & ENVIRONMENTAL SERVICES GROUP
925 E. TWIGGS STREET/TAMPA FLORIDA 33602/PH. (813) 272-5977

TRIPLEX WASTEWATER PUMP STATION ELECTRICAL, CONTROL & INSTRUMENTATION

ELECTRICAL/CONTROL ENCLOSURE ELECTRICAL SCHEMATICS (3PH)(480V/25HP)

DATE:	OCTOBER 2011
PROJ. #	1179-0013
DRAWN	
DESIGNED	
CHECKED	
PROJ. MGR.	

SCALE
HORIZONTAL:
VERTICAL: NA

FILE NUMBER
DRAWING NUMBER
E-1.7

STATUS: REVISED
REVISION 2

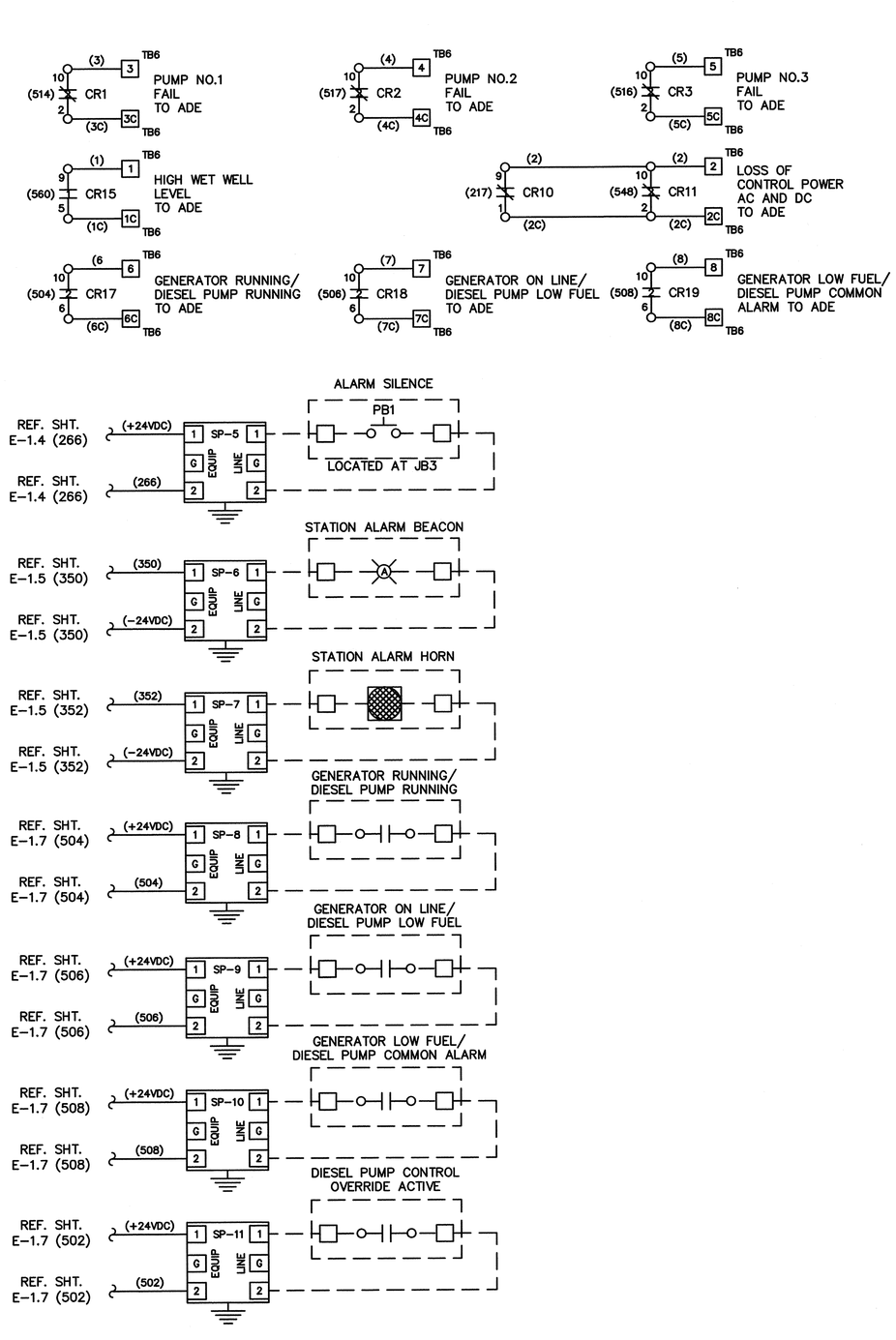

SHT E-1.7
LINE 576
(G)

(G)
LINE 641

LINE 638
(G)

(G)

CABINET SIDE — TB5 — FIELD SIDE

(514)	1	JB1, TB5-1, PUMP NO. 1 HEAT SENSOR
(514B)	2	JB1, TB5-2, PUMP NO. 1 HEAT SENSOR
(205)	3	JB1, TB5-3, PUMP NO. 1 SEAL FAIL
(205B)	4	JB1, TB5-4, PUMP NO. 1 SEAL FAIL
(517)	5	JB1, TB5-5, PUMP NO. 2 HEAT SENSOR
(517B)	6	JB1, TB5-6, PUMP NO. 2 HEAT SENSOR
(208)	7	JB1, TB5-7, PUMP NO. 2 SEAL FAIL
(208B)	8	JB1, TB5-8, PUMP NO. 2 SEAL FAIL
(520)	9	JB1, TB5-9, PUMP NO. 3 HEAT SENSOR
(520B)	10	JB1, TB5-10, PUMP NO. 3 HEAT SENSOR
(212)	11	JB1, TB5-11, PUMP NO. 3 SEAL FAIL
(212B)	12	JB1, TB5-12, PUMP NO. 3 SEAL FAIL

CABINET SIDE — TB2 — FIELD SIDE

(5)	1	AREA LIGHT
(N)	2	AREA LIGHT
(7)	3	ADE, RECP2 OUTLET
(N)	4	ADE, RECP2 OUTLET
(G)	5	ADE, RECP2 OUTLET

TB6

CABINET SIDE — FIELD SIDE

(1)	1	ADE, ZONE1-1, HIGH WETWELL LEVEL
(1C)	1C	ADE, ZONE1-1C, HIGH WETWELL LEVEL
(2)	2	ADE, ZONE2-2, LOSS OF CONTROL POWER
(2C)	2C	ADE, ZONE2-2C, LOSS OF CONTROL POWER
(3)	3	ADE, ZONE3-3, PUMP NO. 1 FAIL
(3C)	3C	ADE, ZONE3-3C, PUMP NO. 1 FAIL
(4)	4	ADE, ZONE4-4, PUMP NO. 2 FAIL
(4C)	4C	ADE, ZONE4-4C, PUMP NO. 2 FAIL
(5)	5	ADE, ZONE5-5, PUMP NO. 3 FAIL
(5C)	5C	ADE, ZONE5-5C, PUMP NO. 3 FAIL
(6)	6	ADE, ZONE6-6, GENERATOR / DIESEL PUMP RUNNING
(6C)	6C	ADE, ZONE6-6C, GENERATOR / DIESEL PUMP RUNNING
(7)	7	ADE, ZONE7-7, GENERATOR ON LINE/ DIESEL PUMP LOW FUEL
(7C)	7C	ADE, ZONE7-7C, GENERATOR ON LINE/ DIESEL PUMP LOW FUEL
(8)	8	ADE, ZONE8-8, GENERATOR LOW FUEL / DIESEL PUMP COMMON ALARM
(8C)	8C	ADE, ZONE8-8C, GENERATOR LOW FUEL / DIESEL PUMP COMMON ALARM

TB4

CABINET SIDE — FIELD SIDE

(550)	1	JB1, TB6-1, LS1
	2	JB1, TB6-2, LS1
(24VAC)	3	JB1, TB6-3, LS2
(557)	4	JB1, TB6-4, LS2
(550B)	5	JB1, TB6-5, LS3
(550C)	6	JB1, TB6-6, LS3

TB7

NOTES:

1. WIRING COLOR CODE:

230/480VAC POWER	BLACK
120VAC CONTROL POWER	RED
120VAC NEUTRAL	WHITE
24VAC CONTROL POWER	ORANGE
24VAC NEUTRAL	ORANGE/WHITE
24VDC POS	BLUE
24VDC NEG	BLUE/WHITE (BLUE)
EXTERNALLY POWERED CIRCUITS	YELLOW

2. DASHED LINES INDICATE ENTITIES EXTERNAL TO CABINET.

REV. NO.	DESCRIPTION	DATE
2	REVISED, TO INCORPORATE FIELD CHANGES	6/28/15
1	CONFORMED	6/17/13

SEAL

SEAL

HILLSBOROUGH COUNTY
PUBLIC UTILITIES
ENGINEERING & ENVIRONMENTAL SERVICES GROUP
925 E. TWIGGS STREET/TAMPA FLORIDA 33602/PH. (813) 272-5977

TRIPLEX WASTEWATER PUMP STATION ELECTRICAL, CONTROL & INSTRUMENTATION

ELECTRICAL/CONTROL ENCLOSURE ELECTRICAL SCHEMATICS (3PH)(480V/25HP)

DATE: OCTOBER 2011
PROJ. # 1179-0013
DRAWN
DESIGNED
CHECKED
PROJ. MGR.

SCALE
HORIZONTAL:
VERTICAL: NA

FILE NUMBER
DRAWING NUMBER: E-1.8

STATUS: REVISED
REVISION 2

LIST OF MAJOR COMPONENTS

ITEM NO.	QTY	DEVICE ID	MANUFACTURER	PART NO.	DESCRIPTION
ALARM SILENCE STATION:					
1	1		SQUARE-D	9001-KYSS100	JUNCTION BOX, 5"Hx4"Wx3.5"D, NEMA 4X, 304SS, SCREW COVER
2	1	PB1	SQUARE-D	9001 KR1BH5	PUSHBUTTON, FULL GUARD, N.O. CONTACTS

NAMEPLATE SCHEDULE

N.P. NO.	QTY	PLATE COLOR/SIZE	LTR COLOR/SIZE	ENGRAVING (LINE1/LINE2/ETC.)
ALARM SILENCE STATION:				
A	1	BLK / 2.25" H x 2.25" W	WHT / 3/16"	ALARM/SILENCE

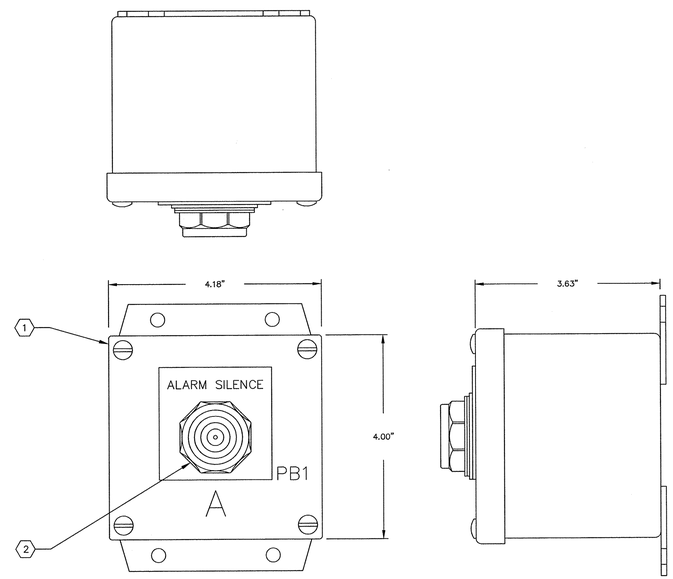

ALARM SILENCE STATION (JB-3)

3/4"=1"

NOTES:

1. WIRING COLOR CODE:

240/480VAC POWER	BLACK
120VAC CONTROL POWER	RED
120VAC NEUTRAL	WHITE
24VDC POS	BLUE
24VDC NEG	BLUE/WHITE (BLUE)
EXTERNALLY POWERED CIRCUITS	YELLOW

REV.NO.	DESCRIPTIONS	DATE
2	REVISED, TO INCORPORATE FIELD CHANGES	8/26/15
1	CONFORMED	5/17/13

REVISIONS

SEAL

SEAL

HILLSBOROUGH COUNTY
PUBLIC UTILITIES
ENGINEERING & ENVIRONMENTAL SERVICES GROUP
925 E. TWIGGS STREET/TAMPA FLORIDA 33602/PH. (813) 272-5977

ALARM SILENCE STATION

ENCLOSURE LAYOUT AND BILL OF MATERIAL

DATE: OCTOBER 2011
PROJ. # 1179-0013
DRAWN
DESIGNED
CHECKED
PROJ. MGR.

SCALE
HORIZONTAL:
VERTICAL: NA

FILE NUMBER
DRAWING NUMBER
E-2.0

STATUS: REVISED
REVISION 2

LIST OF MAJOR COMPONENTS

ITEM NO.	QTY	DEVICE ID	MANUFACTURER	PART NO.	DESCRIPTION
WET WELL JUNCTION BOX (JB1):					
1	1	JB1	HOFFMAN	A30H2410SSLP	ENCLOSURE, 30"Hx24"Wx10"D, NEMA 4X, 304SS, EPOXY WHITE FINISH
2	1		HOFFMAN	A30P24AL	SUBPANEL, 27"Hx21"W, 0.10" THICK, ALUMINUM
3	2	TB1, TB2, TB3*	MARATHON	1333554	POWER DISTRIBUTION BLK, 3 POLE, 310A, 600VAC, PRIM: 1 CONN 6-350 CU, SEC: 2 CONN 14-2/0 CU
		FOR 230V/50HP AND 480V/100HP ONLY:			
	2	TB1, TB2, TB3*	MARATHON	1333565	POWER DISTRIBUTION BLK, 3 POLE, 420A, 600VAC, PRIM: 1 CONN 2-600 CU, SEC: 2 CONN 6-250 CU
4	25	TB5, TB6, TB7	PHOENIX CONTACT	UK5-N	TERMINAL BLOCK
5	3		PHOENIX CONTACT	D-UKK3/5	TERMINAL BLOCK END BARRIER
6	6		PHOENIX CONTACT	1201442	TERMINAL BLOCK END STOP
7	AR		PHOENIX CONTACT		DIN RAIL

NAMEPLATE SCHEDULE

N.P. NO.	QTY	PLATE COLOR/SIZE	LTR COLOR/SIZE	ENGRAVING (LINE1/LINE2/ETC.)
WET WELL JUNCTION BOX (JB1):				
A	1	BLK / 2.00" H x 6.00" W	WHT / 1/2"	JB1

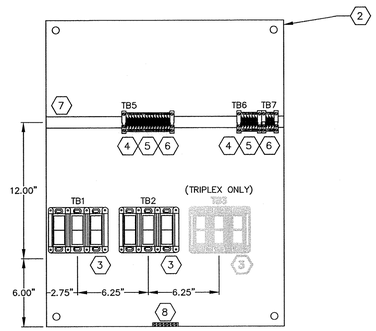

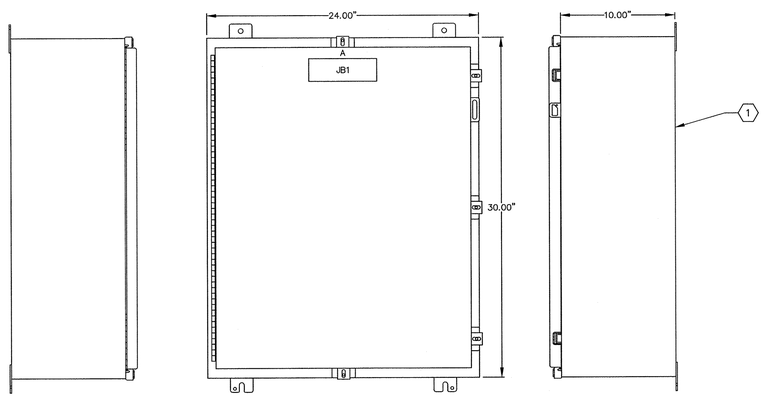

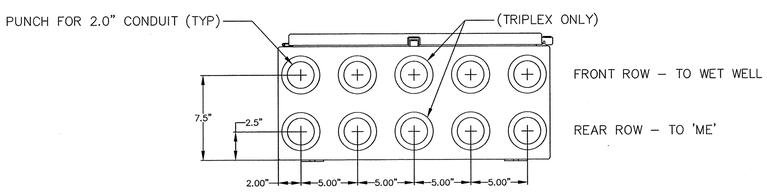

JB1 ENCLOSURE LAYOUT

2" = 1'

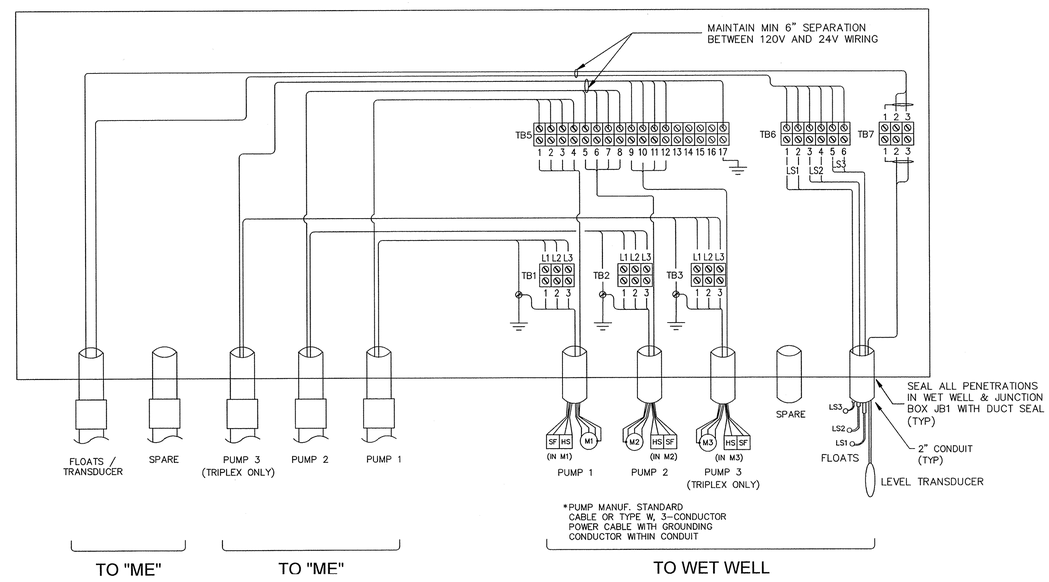

JB1 ELECTRICAL SCHEMATIC

NTS

NOTES:

1. APPLY OXIDE-INHIBITING COMPOUND TO ALL ELECTRICAL TERMINATION CONTACT SURFACES, INCLUDING COMPRESSION AND BOLTED CONNECTIONS. PENETROX COMPOUND BURNDY OR EQUAL PRODUCT.
2. SCREW-DOWN CABLE TIES SHALL BE 3M CABLE TIE BASE MODEL 06299 OR PANDUIT MODEL ABM112 OR APPROVED EQUAL. (SIZE AS REQ'D)
3. CONTRACTOR SHALL MOUNT TERMINALS AS SHOWN.

DESIGN BASIS NOTE:

THIS DRAWING REPRESENTS THE STANDARD DESIGN FOR ALL HILLSBOROUGH COUNTY STANDARD WASTEWATER PUMPING STATIONS. IT WAS DEVELOPED TO IMPROVE RELIABILITY AND MAINTAINABILITY, MINIMIZE SPARE PARTS AND INCREASE SERVICE LIFE. ALL REQUESTS FOR DEVIATION FROM THIS STANDARD MUST BE MADE IN WRITING AND WRITTEN APPROVAL RECEIVED BEFORE MODIFICATIONS ARE MADE. CONTRACTOR IS RESPONSIBLE FOR ALL COSTS NECESSARY TO RESTORE UNAUTHORIZED MODIFICATIONS.

DESIGN ENGINEER NOTE: ***THIS IS NOT A CONSTRUCTION DRAWING***

DESIGN ENGINEER SHALL REFER TO ELECTRICAL DRAWINGS, MECHANICAL DRAWINGS, AND THE HILLSBOROUGH COUNTY WATER AND WASTEWATER TECHNICAL SPECIFICATION IN ORDER TO COORDINATE THE MECHANICAL AND ELECTRICAL INSTALLATIONS. DESIGN ENGINEER SHALL NOT USE THIS DRAWING FOR A SPECIFIC SITE INSTALLATION. FOR EACH INSTALLATION A SPECIFIC SET OF CONSTRUCTION DRAWINGS AND SPECIFICATIONS (IF DEEMED NECESSARY BY THE DESIGN ENGINEER) MUST BE PREPARED IN ACCORDANCE WITH F.S. 471 AND RULES 61G.

REV.NO.	DESCRIPTIONS	DATE
2	REVISED, TO INCORPORATE FIELD CHANGES	8/26/15
1	CONFORMED	5/17/13

REVISIONS

SEAL

SEAL

HILLSBOROUGH COUNTY
PUBLIC UTILITIES
ENGINEERING & ENVIRONMENTAL SERVICES GROUP
925 E. TWIGGS STREET/TAMPA FLORIDA 33602/PH. (813) 272-5977

WET WELL JUNCTION BOX, (JB1)

CABINET LAYOUT, ELECTRICAL SCHEMATIC, AND BILL OF MATERIAL

DATE:	OCTOBER 2011
PROJ. #	1179-0013
DRAWN	
DESIGNED	
CHECKED	
PROJ. MGR.	

SCALE
HORIZONTAL:
VERTICAL: NA

FILE NUMBER
DRAWING NUMBER
E-3.0

STATUS: REVISED
REVISION 2

LIST OF MAJOR COMPONENTS

ITEM NO.	QTY	DEVICE ID	MANUFACTURER	PART NO.	DESCRIPTION
AUTODIALER PANEL (ADE):					
1	1	ADE	STAHLIN	J1614HPL	ENCLOSURE, 16"Hx14"Wx6"D, NEMA 3R, FIBERGLASS, GREY
2	1		STAHLIN	BP1614AL	SUBPANEL, 16"Hx14"W, ALUMINUM
3	1	AD	PHONETICS, INC.	FGD-0800	ALARM DIALER, SENSAPHONE MODEL 800
4	1	RECP2	PHOENIX CONTACT	EM-DUO-120/15	RECEPTACLE BOX, 120VAC, DUPLEX, NON-GFI, 15A
5	AR		PANDUIT		WIRE DUCT, 1.00"Wx2.00"H
6	1	TLSP	PHOENIX CONTACT	DT-TELE-RJ45	TELEPHONE LINE SURGE PROTECTION, (RJ11, RJ12, RJ45 CONNECTIONS)

NAMEPLATE SCHEDULE

N.P. NO.	QTY	PLATE COLOR/SIZE	LTR COLOR/SIZE	ENGRAVING (LINE1/LINE2/ETC.)
AUTODIALER PANEL (ADE):				
A	1	BLK / 2.00" H x 6.00" W	WHT / 1/2"	PNL ADE

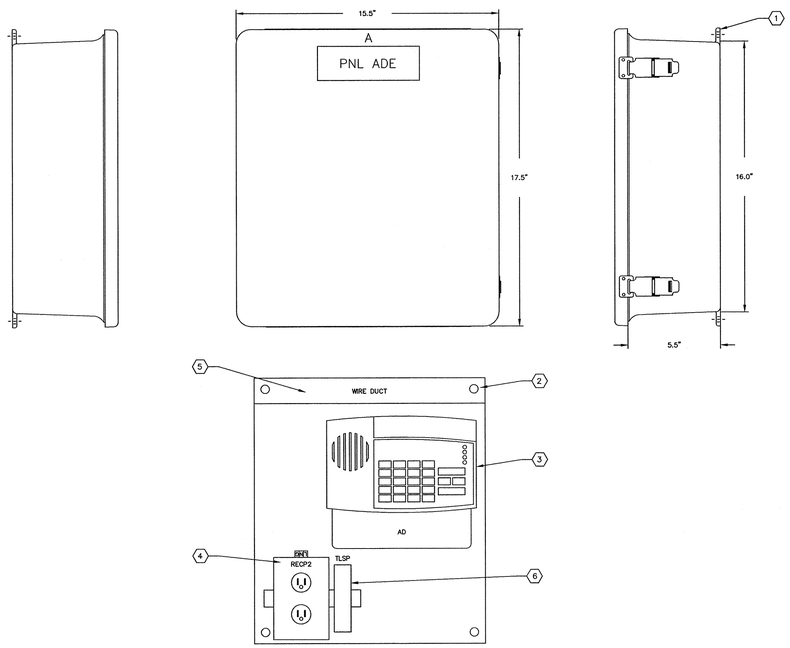

AUTODIALER PANEL (ADE)

1/4"=1'

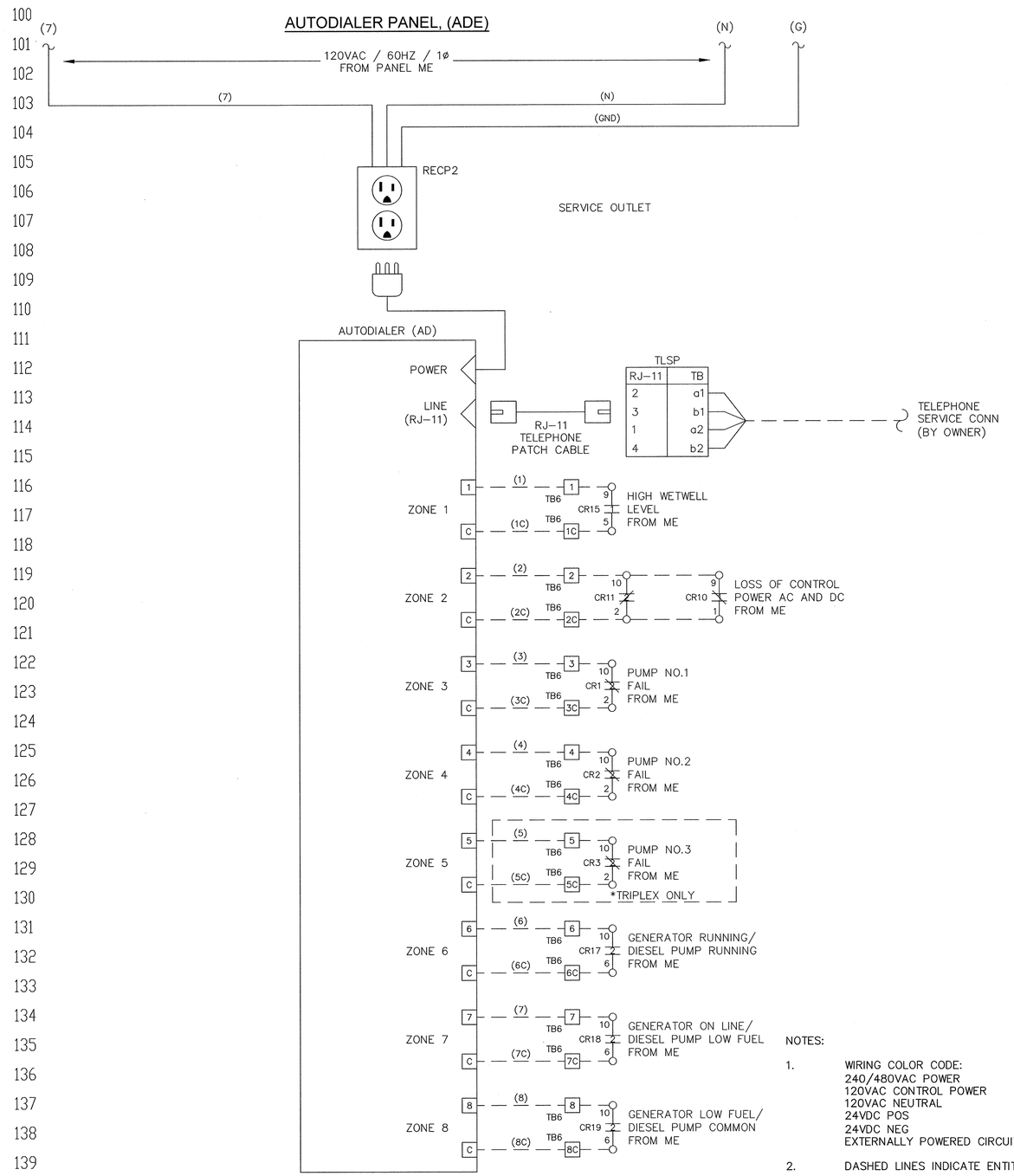

NOTES:

1. WIRING COLOR CODE:

240/480VAC POWER	BLACK
120VAC CONTROL POWER	RED
120VAC NEUTRAL	WHITE
24VDC POS	BLUE
24VDC NEG	BLUE/WHITE (BLUE)
EXTERNALLY POWERED CIRCUITS	YELLOW

2. DASHED LINES INDICATE ENTITIES EXTERNAL TO CABINET.

REV.NO.	DESCRIPTIONS	DATE
2	REVISED, TO INCORPORATE FIELD CHANGES	8/26/15
1	CONFORMED	5/17/13

REVISIONS

SEAL

SEAL

HILLSBOROUGH COUNTY
PUBLIC UTILITIES
ENGINEERING & ENVIRONMENTAL SERVICES GROUP
925 E. TWIGGS STREET/TAMPA FLORIDA 33602/PH. (813) 272-5977

AUTODIALER ENCLOSURE, (ADE)

CABINET LAYOUT, ELECTRICAL SCHEMATIC, AND BILL OF MATERIAL

DATE:	OCTOBER 2011
PROJ. #	1179-0013
DRAWN	
DESIGNED	
CHECKED	
PROJ. MGR.	

SCALE
HORIZONTAL:
VERTICAL: NA

FILE NUMBER
DRAWING NUMBER
E-4.0

STATUS: REVISED
REVISION 2

LIST OF MAJOR COMPONENTS

ITEM NO.	QTY	DEVICE ID	MANUFACTURER	PART NO.	DESCRIPTION
GENERATOR TERMINATION BOX (JB4):					
1	1	JB4	HOFFMAN	A30H2410SSLP	ENCLOSURE, 30"Hx24"Wx10"D, NEMA 4X, 304SS, EPOXY WHITE FINISH
2	1		HOFFMAN	A30P24SS6	SUBPANEL, 27"Hx21"W, 304 SS
3	1		HOFFMAN	AS350SS	HOLE SEAL, 3.50", 300 SERIES SS, WEATHER-PROOF, EPOXY WHITE FINISH
4	5	PDB1,2,3,4,5	MARATHON	1441557	POWER DISTRIBUTION BLK, 1 POLE, 420A, 600VAC, PRIM: 1 CONN 4-600 CU, SEC: 1 CONN 4-600 CU

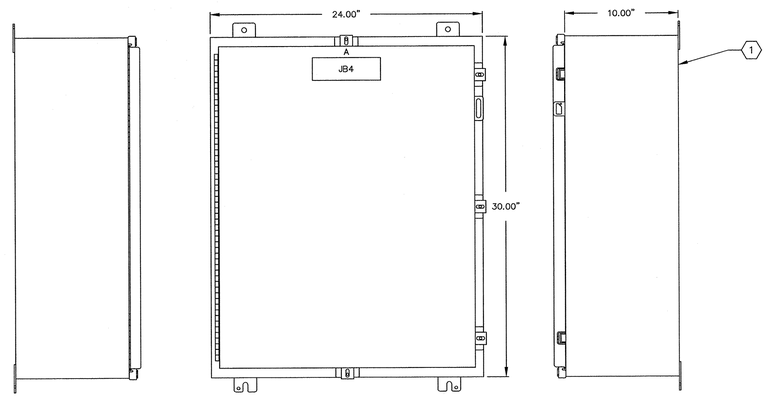

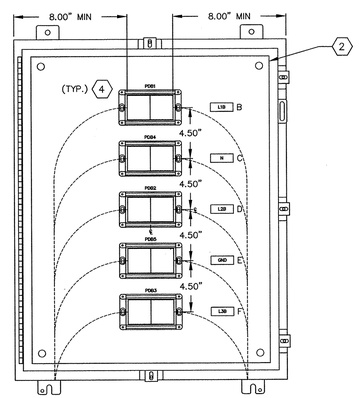

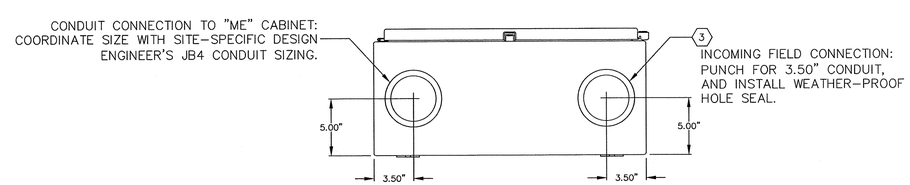

GENERATOR TERMINATION PANEL (JB4)

2"=1'

NAMEPLATE SCHEDULE

N.P. NO.	QTY	PLATE COLOR/SIZE	LTR COLOR/SIZE	ENGRAVING (LINE1/LINE2/ETC.)
GENERATOR TERMINATION BOX (JB4):				
A	1	BLK / 2.00" H x 6.00" W	WHT / 1/2"	JB4
B	1	BLK / 0.75" H x 2.50" W	WHT / 1/4"	L1B
C	1	BLK / 0.75" H x 2.50" W	WHT / 1/4"	N
D	1	BLK / 0.75" H x 2.50" W	WHT / 1/4"	L2B
E	1	BLK / 0.75" H x 2.50" W	WHT / 1/4"	GND
F	1	BLK / 0.75" H x 2.50" W	WHT / 1/4"	L3B

NOTE: FOR USE WITH THE FOLLOWING "ME" PACKAGES ONLY:

- DUP, 3PH/480VAC/25-100HP
- TRI, 3PH/480VAC/25-75HP

REV.NO.	DESCRIPTIONS	DATE
2	REVISED, TO INCORPORATE FIELD CHANGES	8/26/15
1	CONFORMED	5/17/13

REVISIONS

SEAL

SEAL

HILLSBOROUGH COUNTY
PUBLIC UTILITIES
ENGINEERING & ENVIRONMENTAL SERVICES GROUP
925 E. TWIGGS STREET/TAMPA FLORIDA 33602/PH. (813) 272-5977

GENERATOR TERMINATION BOX, JB4 (LARGE)

CABINET LAYOUT AND BILL OF MATERIAL

DATE: OCTOBER 2011
PROJ. # 1179-0013
DRAWN
DESIGNED
CHECKED
PROJ. MGR.

SCALE
HORIZONTAL:
VERTICAL: NA

FILE NUMBER
DRAWING NUMBER
E-6.0

STATUS: REVISED
REVISION 2