PLAN SYMBOLS

	HOME RUN TO PANELBOARD. NO. OF ARROWS INDICATE NO. OF CIRCUITS, HASH MARKS INDICATE NO. OF #12 AWG. CONDUCTORS. NO HASH MARKS INDICATE 2 #12 CONDUCTORS.
	CONDUIT CONCEALED IN WALL, IN SLAB ABOVE, OR ABOVE CEILING
	CONDUIT CONCEALED IN OR BELOW FLOOR OR UNDERGROUND.
	CONDUIT RUN EXPOSED. RUN PARALLEL OR PERPENDICULAR TO STRUCTURE OR WALL.
	FLEXIBLE CONDUIT WITH EQUIPMENT CONNECTION.
	CONCRETE ENCASED DUCTBANK.
A	CEILING MOUNTED LIGHTING FIXTURE, LETTER INDICATES TYPE (TYPICAL).
	WALL MOUNTED LIGHTING FIXTURE.
	FLUORESCENT LIGHTING FIXTURE, CEILING MOUNTED.
	EXTERIOR LUMINAIRE AND MOUNTING STANDARD.
	EXISTING EXTERIOR LIGHTING
	EMERGENCY BATTERY PACK LIGHTING FIXTURE.
J	JUNCTION BOX N.E.C. SURFACE MOUNTED UNLESS INDICATED OTHERWISE.
J	JUNCTION BOX PER N.E.C., FLUSH MOUNTED UNLESS INDICATED OTHERWISE.
	FLUSH OR SURFACE MOUNTED LIGHTING PANELBOARD.
	FLUSH OR SURFACE MOUNTED POWER PANELBOARD.
30	DRY TYPE TRANSFORMER. NO. INDICATES KVA RATING.
	20A, 125V, 3W DUPLEX RECEPTACLE IN FLUSH OUTLET BOX, 18" ABOVE FINISHED FLOOR.
	20A, 125V, 3W DUPLEX RECEPTACLE IN FLUSH OUTLET BOX, 48" ABOVE FINISHED FLOOR OR 2" ABOVE COUNTER AS REQUIRED.
	20A, 125V, 3W DUPLEX RECEPTACLE, SURFACE MOUNTED.
	DISCONNECT RACK MOUNTED
	HOA/DISCONNECT RACK MOUNTED
	30A, 250V 1ø, 3W SINGLE RECEPTACLE IN FLUSH OUTLET BOX, 18" ABOVE FINISHED FLOOR.
S	SINGLE POLE SWITCH IN FLUSH OUTLET BOX, 48" ABOVE FINISHED FLOOR, UNLESS OTHERWISE NOTED (TYPICAL).
S	SINGLE POLE SWITCH, SURFACE MOUNTED.
S_3	THREE-WAY SWITCH IN FLUSH OUTLET BOX.
S_M	MOTOR DUTY, SINGLE PHASE DISCONNECT, NEMA 4X STAINLESS STEEL.
	NON-FUSIBLE DISCONNECT SWITCH, 30A, 3P UNLESS OTHERWISE INDICATED.
	NON-FUSIBLE DISCONNECT SWITCH, 30A, 3P UNLESS OTHERWISE INDICATED, WITH REMOTE CONTROL STATION AS REQUIRED BY ELEMENTARY DIAGRAMS OR SPECS.
10	ELECTRIC A.C. MOTOR, NO. INDICATES HORSEPOWER.
F 30/20	FUSED DISCONNECT SWITCH (30/20: 30=SWITCH RATING, 20=FUSE RATING)
M	MOTORIZED VALVE
	COMBINATION MOTOR STARTER
VFD	VARIABLE FREQUENCY DRIVE
T	THERMOSTAT
	ELECTRIC HEATER
	FLUSH OUTLET BOX AND TELEPHONE COVER PLATE 48" ABOVE FINISHED FLLOR.
C	CONTROL PULLBOX. SEE "PULL BOX DETAIL"
P	POWER MANHOLE. SEE "MANHOLE DETAIL"
TC	TERMINATION CABINET, CLASS 1, DIVISION 2
	GROUND ROD TEST WELL W/ MECHANICAL CONNECTION TO GROUND CONDUCTOR
	GROUND ROD TEST WELL W/ EXOTHERMIC WELD CONNECTION TO GROUND CONDUCTOR
	EYS FITTING AND CORRESPONDING "CHICO" CEMENT. COMBINATION SHALL BE RATED TO PROVIDE A CLASS 1, DIVISION 2 INSTALLATION.
	MAJOR COMPONENT, X COMPONENT NUMBER
A-V	NAMEPLATE SCHEDULE
	OVERLOAD

PLAN SYMBOLS (CONTINUED)

AIT	ANALYZING INDICATING TRANSMITTER
FE	FLOW ELEMENT
LS	LEVEL SWITCH
LE	LEVEL ELEMENT
PS	PRESSURE SWITCH
ZS	ZERO SPEED SWITCH
SV	SOLENOID VALVE
LLS	LIQUID LEVEL SWITCH
FS	FLOW SWITCH
FIT	FLOW INDICATING TRANSMITTER
LIT	LEVEL INDICATING TRANSMITTER

SINGLE LINE DIAGRAM SYMBOLS

	COMBINATION MOTOR STARTER
V	VOLTMETER
A	AMMETER
VS	THREE PHASE VOLE SWITCH
AS	THREE PHASE AMP SWITCH
GFI	GROUND FAULT INTERRUPTER
W	WATT HOUR METER
	FUSE
	CAPACITOR
	DRAW-OUT CIRCUIT BREAKER
	MOLDED CASE CIRCUIT BREAKER
	TYPICAL SELECTOR SWITCH AND CONTROL. SEE ELEMENTARY DIAGRAMS FOR EXACT TYPE.
10	ELECTRIC A.C. MOTOR, NO. INDICATES HORSEPOWER.
1	ELECTRIC D.C. MOTOR, NO. INDICATES HORSEPOWER.
	SERVICE OR EQUIPMENT GROUND.
	NON-FUSIBLE DISCONNECT SWITCH, 30A, 3P UNLESS OTHERWISE INDICATED.
	NON-FUSIBLE DISCONNECT SWITCH, 30A, 3P UNLESS OTHERWISE INDICATED, WITH REMOTE CONTROL STATION AS REQUIRED BY ELEMENTARY DIAGRAMS OR SPECS.
	LIGHTING PANELBOARD
	POWER PANELBOARD
K	KIRK KEY INTERLOCK
	CURRENT TRANSFORMERS
	POTENTIAL TRANSFORMERS
	MANUAL OR AUTOMATIC TRANSFER SWITCH

CONTROL DIAGRAM SYMBOLS

	DUPLEX RECEPTACLE
	NORMALLY OPEN CONTACT
	NORMALLY CLOSED CONTACT
	LIMIT SWITCH, NORMALLY OPEN
	LIMIT SWITCH, NORMALLY CLOSED
	PRESSURE SWITCH, NORMALLY OPEN
	PRESSURE SWITCH, NORMALLY CLOSED
	FLOAT SWITCH, NORMALLY OPEN
	FLOAT SWITCH, NORMALLY CLOSED

CONTROL DIAGRAM SYMBOLS (CONTINUED)

	FLOW SWITCH, NORMALLY OPEN
	FLOW SWITCH, NORMALLY CLOSED
	TEMPERATURE SWITCH, NORMALLY OPEN
	TEMPERATURE SWITCH, NORMALLY CLOSED
	NORMALLY OPEN, TIMED TO CLOSE CONTACT
	NORMALLY CLOSED, TIMED TO OPEN CONTACT
	NORMALLY CLOSED, TIMED TO CLOSE CONTACT
	NORMALLY OPEN, TIMED TO OPEN CONTACT
LS	LIMIT SWITCH
XS	TORQUE SWITCH
PS	PRESSURE SWITCH
ZS	ZERO SPEED SWITCH
SV	SOLENOID VALVE
LLS	LIQUID LEVEL SWITCH
VS	VIBRATION SWITCH
AR	ALARM RELAY
AT	ALARM TIMER
CR	CONTROL RELAY
M	MOTOR STARTER
TR	TIMING RELAY
A	ALARM INDICATING LIGHT
R	RUN INDICATING LIGHT
	MOMENTARY CONTACT PUSHBUTTON
	MOMENTARY BREAK PUSHBUTTON OR RESET
K	KEYED SWITCH
	MAINTAINED CONTACT ON-OFF SWITCH
	START/STOP (S/S) CONTROL SWITCH MAINTAINED CONTACT
	THREE POSITION MAINTAINED CONTACT SELECTOR SWITCH
	FUSE
	MOLDED CASE CIRCUIT BREAKER
	CONTROL POWER TRANSFORMER
	REMOTE TERMINAL BLOCK POINT
	HORN
	SURGE ARRESTOR

ABBREVIATIONS

A	AMPERES
ACCU	AIR COOLED CONDENSING UNIT
AFF	ABOVE FINISHED FLOOR
AHU	AIR HANDLING UNIT
AIC	AMPS INTERRUPTING CURRENT
AER	AERATOR
AS	AUTOMATIC TRANSFER SWITCH
BKR	BREAKER
BLDG	BUILDING
C	CONDUIT
CB	CIRCUIT BREAKER
CLB	CURRENT LIMITING BREAKER
CP	CONTROL PANEL
CPSA	CONTROL POWER SURGE ARRESTOR
CT	CURRENT TRANSFORMER
CU	COPPER
DH	DATA HIGHWAY
DISC	DISCONNECT
DO	DIGITAL OUTPUT
DPDT	DOUBLE POLE DOUBLE THROW
DPST	DOUBLE POLE SINGLE THROW
EFF	EFFLUENT
ELEC	ELECTRICAL

ABBREVIATIONS (CONTINUED)

ELR	EMERGENCY LOCK-OUT RELAY
EM	EMERGENCY
ENCL	ENCLOSURE
EP	EXPLOSION PROOF
ESB	ENERGY SAVING BALLAST
ETM	ELAPSED TIME METER
EUH	ELECTRIC UNIT HEATER
EVA	ELECTRIC VALVE ACTUATOR
EXH	EXHAUST
EXIST	EXISTING
F&I	FINISH AND INSTALL
FVNR	FULL VOLTAGE NON-REVERSING
GEN	GENERATOR
GFI	GROUND FAULT INTERRUPTER
GND, G	GROUND
RGS	RIGID GALVANIZED STEEL
HCPUD	HILLSBOROUGH COUNTY PUBLIC UTILITIES DEPARTMENT.
HOA	HAND-OFF-AUTOMATIC
HOLR	HAND-OFF-LOCAL-REMOTE
HOR	HAND-OFF-REMOTE
HP	HORSEPOWER
HPS	HIGH PRESSURE SODIUM
HWY	HIGHWAY
INSTR	INSTRUMENTATION
IPS	INFLUENT PUMP STATION
KVA	KILOVOLT-AMPERES
KW	KILOWATT
LIG	LIGHTING
MAX	MAXIMUM
MCC	MOTOR CONTROL CENTER
MFR	MANUFACTURER
MH	METAL HALIDE
MIN	MINIMUM
MLO	MAIN LUGS ONLY
MS	MOTOR STARTER
MSC	MANUFACTURER SUPPLIED CABLE
MTD	MOUNTED
MTS	MANUAL TRANSFER SWITCH
MV	MERCURY VAPOR
NEC	NATIONAL ELECTRIC CODE
NEUT, N	NEUTRAL
NTS	NOT TO SCALE
OC	ON CENTER
OH	OVERHEAD
OL	OVERLOAD RELAY
P	POLE
PC	PHOTOCELL
PCP	PUMP CONTROL PANEL
PDB	POWER DISTRIBUTION BLOCK
PE	POWER EQUIPMENT
PM	PHASE MONITOR
PMR	PHASE MONITOR RELAY
PNL	PANEL
PS	PUMP STATION
PVC	POLYVINYL CHLORIDE
RA	RIGID ALUMINUM
RECPT	RECEPTACLE
RIU	REMOTE TELEMETRY UNIT
RVNR	REDUCED VOLTAGE NON-REVERSING
SA	SURGE ARRESTOR
SF	SLOW FORWARD
SH	SHIELDED
SS	STAINLESS STEEL
STP	SHIELDED TWISTED PAIR
STR	STARTER
SUPP	SUPPRESSOR
SW	SWITCH
SWGR	SWITCHGEAR
TB	TERMINAL BLOCK
TBR	TO BE REMOVED
TD	TIME DELAY
TR	TRANSFORMER
TYP	TYPICAL
UG	UNDERGROUND
UON	UNLESS OTHERWISE NOTED
UPS	UNINTERRUPTABLE POWER SUPPLY
UV	ULTRAVIOLET
V	VOLT
VFD	VARIABLE FREQUENCY DRIVE
W	WATT
W/	WITH
WP	WEATHERPROOF
ø	PHASE

NOTES

1. ALL WORK SHALL COMPLY WITH N.E.C. AND LOCAL CODES.
2. CONDUCTORS SHALL NOT BE SPLICED EXCEPT AS NOTED IN SPECS.
3. ALL CONTROL PANELS SHALL BE UL LISTED.
4. THESE DRAWINGS ARE INTENDED TO SHOW STANDARDS ON NEW PUMP STATIONS. AT THE COUNTY'S DISCRETION REHABS AND RENOVATIONS MAY HAVE DIFFERING DETAILS ON A SITE BY SITE BASIS.

REV.NO.	DESCRIPTIONS	DATE
	FOR USE	

REVISIONS

SEAL

SEAL

NOTE
FOR USE WITH THE FOLLOWING
IN-FILL GRINDER "ME" PKGS ONLY

3PH/480VAC/4-11HP

HILLSBOROUGH COUNTY
PUBLIC UTILITIES
ENGINEERING & ENVIRONMENTAL SERVICES GROUP
925 E. TWIGGS STREET/TAMPA FLORIDA 33602/PH. (813) 272-5977

SMALL NEIGHBORHOOD GRINDER
PUMP STATION
ELECTRICAL, CONTROL & INSTRUMENTATION

ELECTRICAL SYMBOLS, NOTES
AND ABBREVIATIONS

DATE:	APRIL 2015
PROJ. #	T15001
DRAWN	
DESIGNED	
CHECKED	
PROJ. MGR.	

SCALE
HORIZONTAL:
VERTICAL:
NA

FILE NUMBER
DRAWING NUMBER
E-0.0

STATUS: ---
REVISION

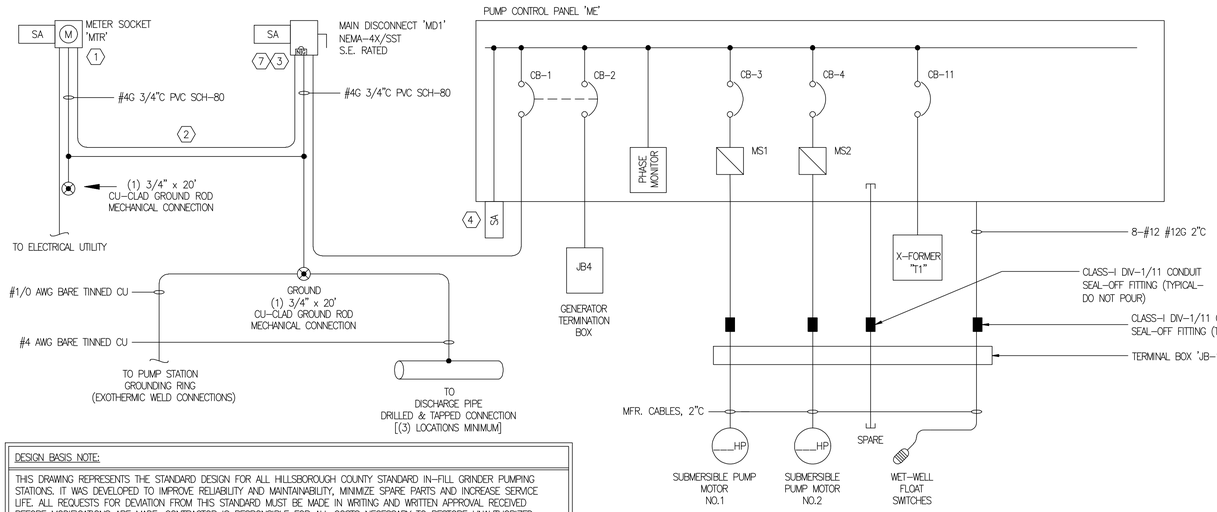

DESIGN BASIS NOTE:

THIS DRAWING REPRESENTS THE STANDARD DESIGN FOR ALL HILLSBOROUGH COUNTY STANDARD IN-FILL GRINDER PUMPING STATIONS. IT WAS DEVELOPED TO IMPROVE RELIABILITY AND MAINTAINABILITY, MINIMIZE SPARE PARTS AND INCREASE SERVICE LIFE. ALL REQUESTS FOR DEVIATION FROM THIS STANDARD MUST BE MADE IN WRITING AND WRITTEN APPROVAL RECEIVED BEFORE MODIFICATIONS ARE MADE. CONTRACTOR IS RESPONSIBLE FOR ALL COSTS NECESSARY TO RESTORE UNAUTHORIZED MODIFICATIONS.

DESIGN ENGINEER NOTE: *THIS IS NOT A CONSTRUCTION DRAWING*

DESIGN ENGINEER SHALL REFER TO ELECTRICAL DRAWINGS, MECHANICAL DRAWINGS, AND THE HILLSBOROUGH COUNTY WATER AND WASTEWATER TECHNICAL SPECIFICATION IN ORDER TO COORDINATE THE MECHANICAL AND ELECTRICAL INSTALLATIONS, DESIGN CONSTRUCTION DRAWINGS AND SPECIFICATIONS (IF DEEMED NECESSARY BY THE DESIGN ENGINEER) MUST BE PREPARED IN ACCORDANCE WITH F.S. 471 AND RULES 61G.

480VAC LOAD CALCULATIONS

DESCRIPTION				AMPERS
PUMP NO.1	__HP	480VAC	3-Φ	__AMPS
PUMP NO.2	__HP	480VAC	3-Φ	__AMPS
		MOTOR SUB TOTAL:		__AMPS
		25% OF LARGEST MOTOR:		__AMPS
		TOTAL MOTOR LOAD:		__AMPS
ODOR CONTROL SYSTEM (FUTURE)	1200W	480VAC	3-Φ	2.5
TRANSFORMER	3KVA	480VAC	3-Φ	6.25
		TOTAL MAXIMUM PHASE AMPERES:		__AMPS

SERVICE SIZE: ___A, 480VAC, 3Φ 4-WIRE, MINIMUM

KEYNOTES:

1. ELECTRICAL CONTRACTOR SHALL COORDINATE WITH TECO FOR METERING REQUIREMENTS AND SERVICE CONSTRUCTION STANDARDS (SESR-2010). WIRE IDENTIFICATION AND PHASE ARRANGEMENT SHALL BE PER NEC.
2. EQUIPMENT AND WIRE SHALL BE SIZED AND RATED ACCORDING TO THE SERVICE VOLTAGE AND RESPECTIVE PUMP SIZES AT THE STATION. REFER TO CROSS REFERENCE TABLE ON DRAWING E-1.2.
3. MD1, CB1 THRU CB5, AND CB10 SHALL BE CAPABLE OF INTERRUPTING A FAULT CURRENT OF 25,000 AIC MINIMUM.
4. CONTRACTOR SHALL NOT SPLICE SA DEVICE LEADS.
5. ROUND OVER AND GRIND ALL EDGES SMOOTH TO PROTECT PERSONNEL FROM POTENTIAL INJURY.
6. ALARM STROBE SHALL BE MOUNTED 18" MINIMUM ABOVE TOP OF SURROUNDING FENCE.
7. MAIN DISCONNECT (MD1) SHALL BE FURNISHED WITH A 316 STAINLESS STEEL NEMA 4X ENCLOSURE WITH WATERTIGHT HUBS, A SOLID NEUTRAL ASSEMBLY AND AN EQUIPMENT GROUND KIT, SUITABLE FOR USE AS SERVICE ENTRANCE EQUIPMENT. MD1 SHALL BE FURNISHED WITH A CIRCUIT BREAKER (SEE CROSS REFERENCE TABLE ON DWG E-1.2) RATED 25 KAIC (MIN.) AT OPERATING VOLTAGE AND SHALL BE ABLE TO BE LOCKED IN THE OPEN POSITION. PROVISIONS SHALL BE PROVIDED FOR LOCKING THE DISCONNECT ENCLOSURE DOOR IN THE CLOSED POSITION. MD1 SHALL BE FURNISHED WITH A 3-PHASE SURGE ARRESTOR (SQ D SDSA3650). ADD NAMEPLATE (BLACK-2"x6") W/ WHITE 2" HIGH LETTERS ENGRAVED "MD1".
8. NOT USED.
9. RACK-MOUNT POWER RECEPTACLE: FINAL INSTALLATION LOCATION TO BE COORDINATED WITH COUNTY REPRESENTATIVE DURING DESIGN AND CONSTRUCTION.

GENERAL NOTES:

1. ALL ELECTRIC WORK SHALL COMPLY WITH THE NEC, NECS AND LOCAL CODES INCLUDING OWNERS STANDARDS AND REQUIREMENTS.
2. ALL POWER & CONTROL CONDUCTORS SHALL BE 600V RATED THHN/THWN-2 STRANDED CU AND SIZED PER NEC.
3. ALL EXPOSED CONDUIT SHALL BE ALUMINUM THRU FIRST UNDERGROUND 90° BEND. WHERE IN CONTACT WITH CONCRETE SLAB, ALUMINUM CONDUIT SHALL BE COATED USING BITUMINOUS PAINT.
4. ALL UNDERGROUND CONDUITS SHALL BE PVC SCH-80.
5. ALL MECHANICAL CONNECTIONS SHALL BE THROUGH-BOLTED MADE WITH STAINLESS STEEL HARDWARE AND FASTENERS WHICH INCLUDE HEAVY GAUGE FLAT AND LOCK WASHERS.
6. ALL NEW PUMP STATIONS SHALL HAVE 480/277V, 3PH, 4-WIRE, 60HZ SERVICE, AS DESCRIBED IN THE COUNTY TECHNICAL SPECIFICATIONS, UNLESS OTHERWISE APPROVED BY THE COUNTY.
7. GROUNDING BUSHINGS SHALL BE USED ON ALL METAL CONDUITS IN ALL ENCLOSURES.

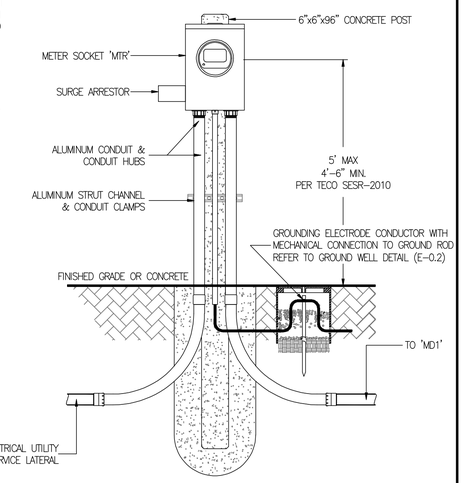

UTILITY METER DETAIL (FRONT ELEVATION)

N.T.S.

NOTES:

1. MOUNT METER TO CONCRETE POST USING ALUMINUM STRUT, UTILIZING STANDARD MOUNTING HOLES PROVIDED BY THE MANUFACTURER.
2. USE 316-SST FASTENERS AND HARDWARE.

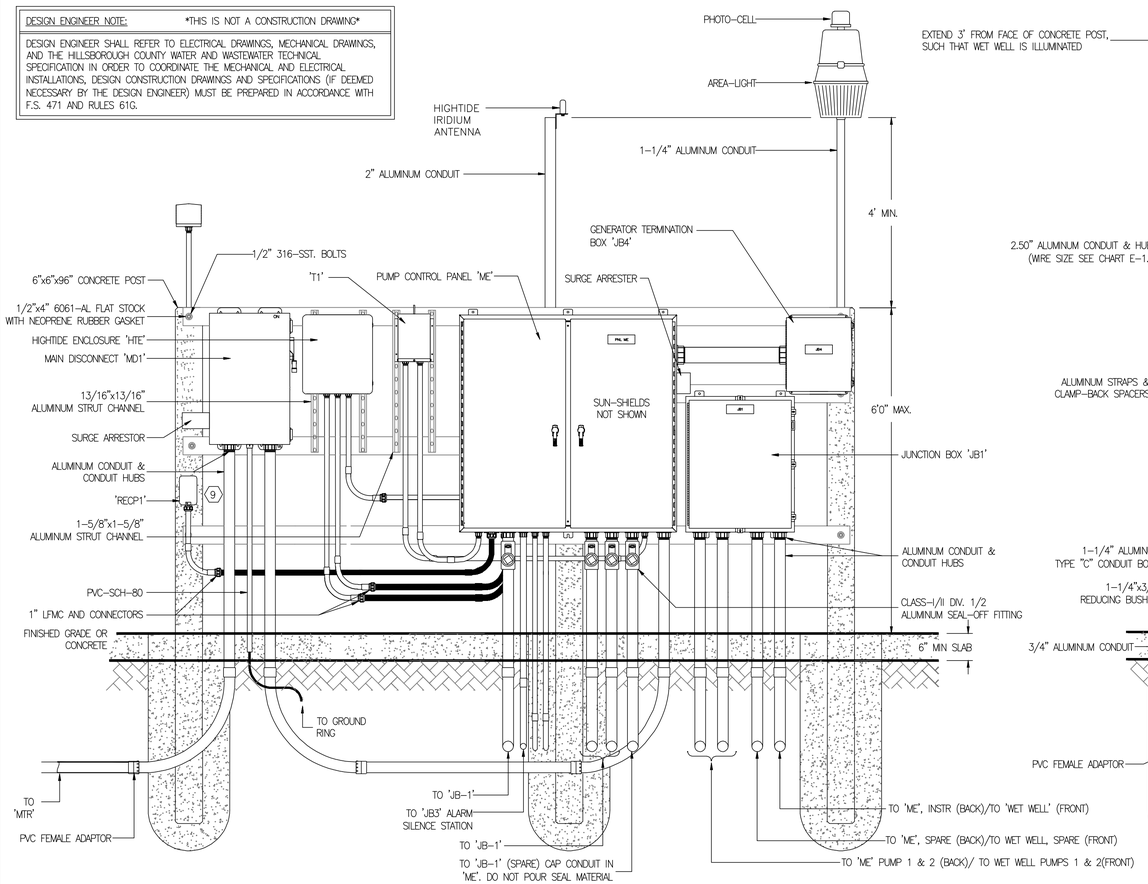

ELECTRICAL EQUIPMENT RACK DETAIL (FRONT ELEVATION)

N.T.S.

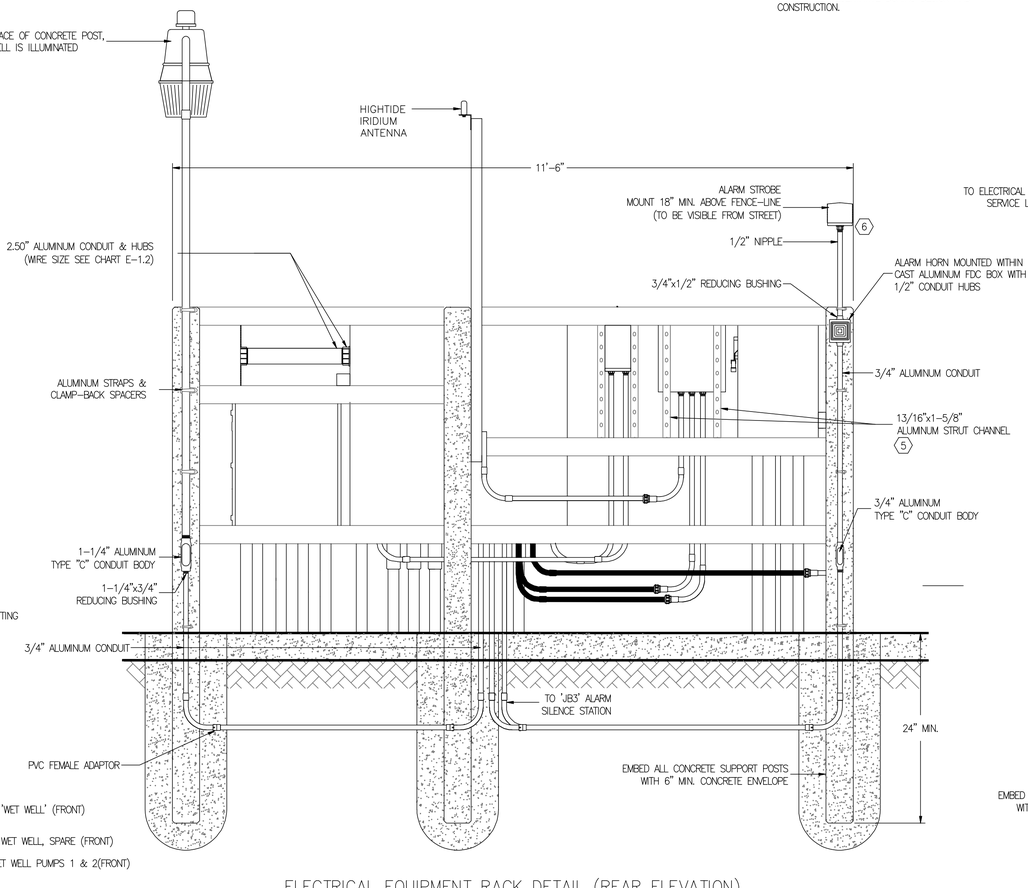

ELECTRICAL EQUIPMENT RACK DETAIL (REAR ELEVATION)

N.T.S.

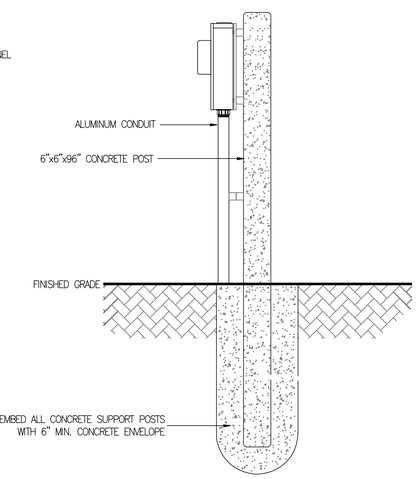

UTILITY METER DETAIL (RIGHT-SIDE ELEVATION)

N.T.S.

REV.NO.	DESCRIPTIONS	DATE
	FOR USE	

REVISIONS

SEAL

SEAL

NOTE
FOR USE WITH THE FOLLOWING
IN-FILL GRINDER "ME" PKGS ONLY

3PH/480VAC/4-11HP

HILLSBOROUGH COUNTY
PUBLIC UTILITIES
ENGINEERING & ENVIRONMENTAL SERVICES GROUP
925 E. TWIGGS STREET/TAMPA FLORIDA 33602/PH. (813) 272-5977

SMALL NEIGHBORHOOD GRINDER PUMP STATION
ELECTRICAL, CONTROL & INSTRUMENTATION

ELECTRICAL POWER PLAN AND DETAILS (3PH)(480V/4-11 HP)

DATE:	APRIL 2015
PROJ. #	T15001
DRAWN	
DESIGNED	
CHECKED	
PROJ. MGR.	

SCALE
HORIZONTAL:
VERTICAL: NA

FILE NUMBER
DRAWING NUMBER
E-0.1

STATUS: ---
REVISION

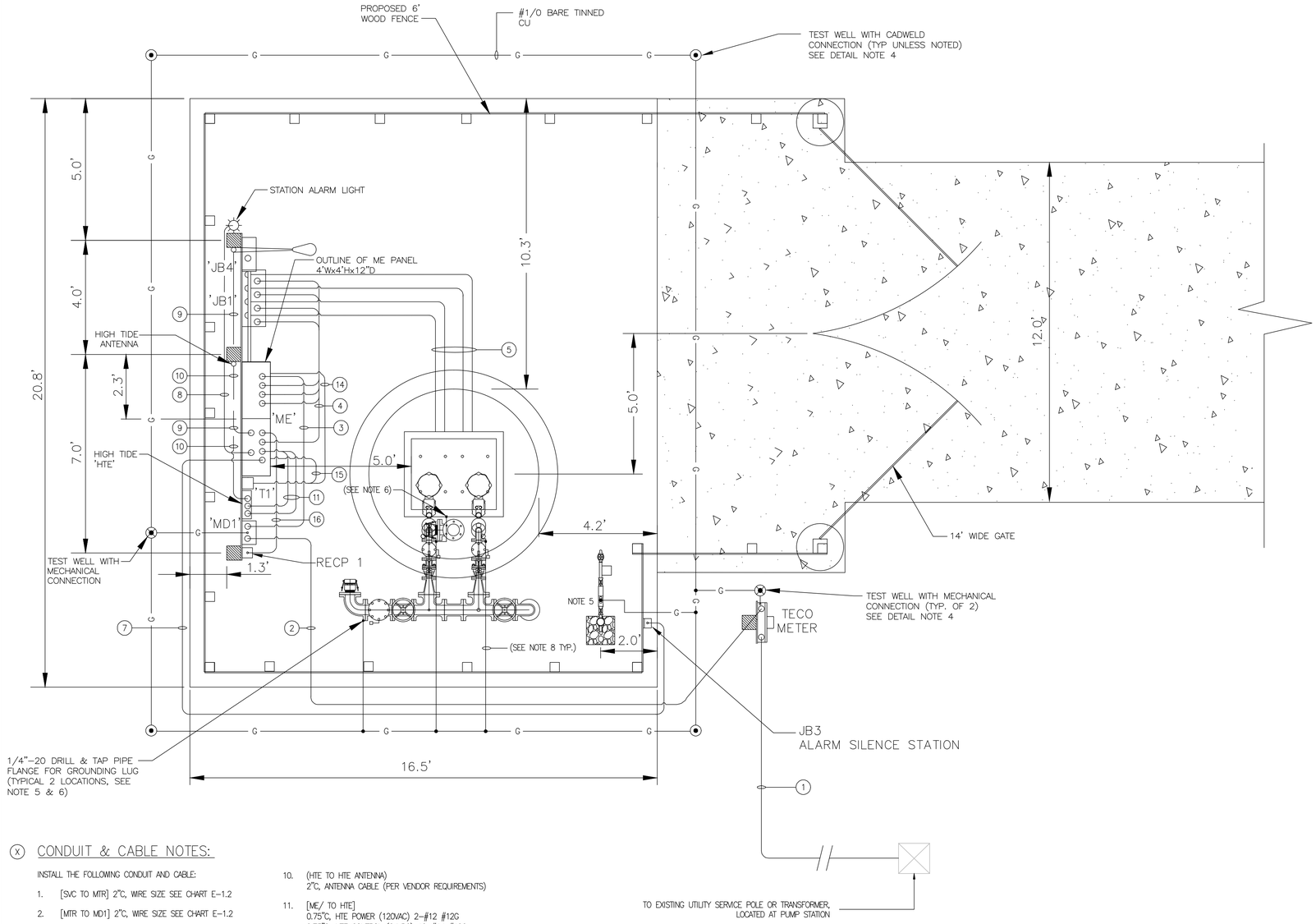

GENERAL NOTES:

1. ALL ELECTRICAL WORK SHALL COMPLY WITH THE NEC, NESC AND LOCAL CODES INCLUDING OWNER'S STANDARDS AND REQUIREMENTS.
2. ALL POWER & CONTROL CONDUCTORS SHALL BE 600V RATED THHN/THWN-2 STRANDED CU AND SIZED PER NEC.
3. ALL EXPOSED CONDUITS SHALL BE ALUMINUM THRU FIRST UNDERGROUND 90° BEND. WHERE IN CONTACT WITH CONCRETE SLAB, ALUMINUM CONDUIT SHALL BE COATED USING BITUMINOUS PAINT.
4. ALL UNDERGROUND CONDUITS SHALL BE PVC SCH-80.
5. ALL MECHANICAL CONNECTIONS SHALL BE MADE WITH STAINLESS STEEL HARDWARE AND FASTNERS WHICH INCLUDE HEAVY GAUGE FLAT AND LOCK WASHERS.
6. GROUND CONDUCTOR AT FORCEMAIN PIPING SHALL EXTEND THROUGH SLAB VIA 1" SCH. 80 PVC CONDUIT. BOND GROUND CONDUCTORS TO PUMPS ABOVE GRADE PIPING AT CHECK VALVES FLANGE CONNECTIONS AND TO FORCEMAIN FLANGE CONNECTION.
7. LAYOUT SHOWN IS TYPICAL BUT MAY BE ADJUSTED AS REQUIRED BASED ON SPECIFIC SITE CONDITIONS. DESIGN ENGINEER SHALL ARRANGE EQUIPMENT AS CLOSE AS POSSIBLE TO THIS LAYOUT AND COORDINATE ANY MODIFICATIONS WITH HCPUD.
8. GROUND TAPS TO BE #4 AWG BARE TINNED CU.

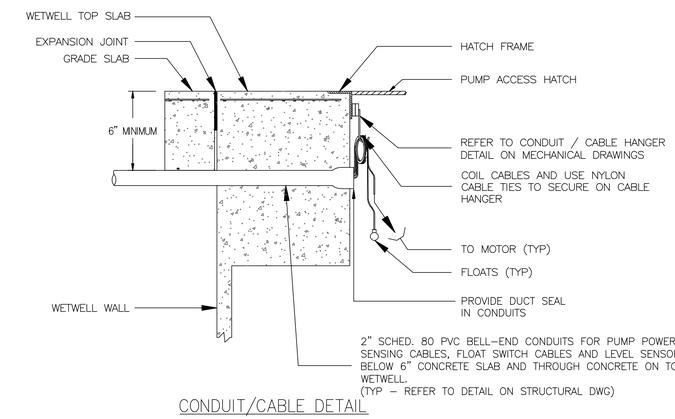

CONDUIT/CABLE DETAIL

N.T.S.

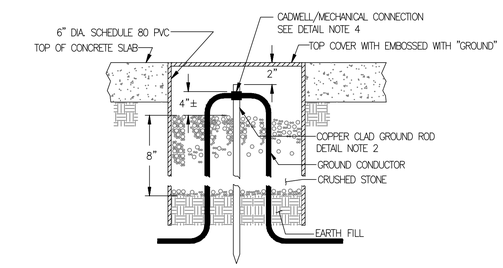

DETAIL NOTES:

1. TYPICAL FOR EACH GROUND ROD.
2. 3/4" x 20' COPPER CLAD DRIVEN GROUND ROD, QUANTITY AS SHOWN ON PLAN.
3. CONTRACTOR SHALL MEASURE THE RESISTANCE OF INSTALLED GROUNDING ELECTRODES AND IF ABOVE 5 OHMS, CONTRACTOR SHALL AUGMENT THE GROUND SYSTEM AS NECESSARY.
4. A MECHANICAL CONNECTION SHALL BE USED TO BOND THE GROUND ROD TO THE GROUNDING CONDUCTOR IN THE WELLS LOCATED ADJACENT TO THE TECO METER AND TO MD1.

GROUND ROD WELL DETAIL

N.T.S.

(X) CONDUIT & CABLE NOTES:

INSTALL THE FOLLOWING CONDUIT AND CABLE:

1. [SVC TO MTR] 2"C, WIRE SIZE SEE CHART E-1.2
2. [MTR TO MD1] 2"C, WIRE SIZE SEE CHART E-1.2
3. [MD1 TO ME/CB1] 2"C, WIRE SIZE SEE CHART E-1.2
4. [ME/PMP1 TO JB1] 2"C, WIRE SIZE SEE CHART E-1.2, 4-#16 AWG
   [ME/PMP2 TO JB1] 2"C, WIRE SIZE SEE CHART E-1.2, 4-#16 AWG
   [ME/CONTL TO JB1] 2"C, FLOATS (24VAC) 6-#12 AWG,
   [ME/SPARE TO JB1] 2"C (DO NOT POUR SEAL)
5. [JB1/PMP1 TO WELL] 2"C, MFR. CABLE
   [JB1/PMP2 TO WELL] 2"C, MFR. CABLE
   [JB1/CONTL TO WELL] 2"C, FLOATS (24VAC) MFR. CABLE,
   [JB1/SPARE TO WELL] 2"C
6. NOT USED
7. [ME/ALM SIL TO JB3] 0.75"C, (120VAC) 2-#14 #12G
8. [ME TO ALARM STROBE-HORN]
   0.75"C, (120VAC) 4-#14 #12G
9. [ME/AREA LIGHT TO AREA LIGHT]
   0.75"C, (120VAC) 2-#12, #12G
10. (HTE TO HTE ANTENNA)
    2"C, ANTENNA CABLE (PER VENDOR REQUIREMENTS)
11. [ME/ TO HTE]
    0.75"C, HTE POWER (120VAC) 2-#12 #12G
    0.75"C, HTE CONTROL (24VDC) 10-#14 #12G
12. NOT USED.
13. NOT USED
14. (480VAC PANEL ONLY)
    [ME/CB11 TO T1]
    0.75"C, (480VAC PRIMARY) 2-#12 #12G
15. (480VAC PANEL ONLY)
    [T1 TO ME/CB12]
    0.75"C, (120VAC SECONDARY) 2-#10
16. (ME/CB21 TO RECP1)
    0.75"C, RECP1 POWER (120VAC) 2-#12 #12G

ELECTRICAL SITE PLAN

(NOTE 7)

DESIGN BASIS NOTE:

THIS DRAWING REPRESENTS THE STANDARD DESIGN FOR ALL HILLSBOROUGH COUNTY STANDARD IN-FILL GRINDER PUMPING STATIONS. IT WAS DEVELOPED TO IMPROVE RELIABILITY AND MAINTAINABILITY, MINIMIZE SPARE PARTS AND INCREASE SERVICE LIFE. ALL REQUESTS FOR DEVIATION FROM THIS STANDARD MUST BE MADE IN WRITING AND WRITTEN APPROVAL RECEIVED BEFORE MODIFICATIONS ARE MADE. CONTRACTOR IS RESPONSIBLE FOR ALL COSTS NECESSARY TO RESTORE UNAUTHORIZED MODIFICATIONS.

DESIGN ENGINEER NOTE: *THIS IS NOT A CONSTRUCTION DRAWING*

DESIGN ENGINEER SHALL REFER TO ELECTRICAL DRAWINGS, MECHANICAL DRAWINGS, AND THE HILLSBOROUGH COUNTY WATER AND WASTEWATER TECHNICAL SPECIFICATION IN ORDER TO COORDINATE THE MECHANICAL AND ELECTRICAL INSTALLATIONS, DESIGN CONSTRUCTION DRAWINGS AND SPECIFICATIONS (IF DEEMED NECESSARY BY THE DESIGN ENGINEER) MUST BE PREPARED IN ACCORDANCE WITH F.S. 471 AND RULES 61G.

REV.NO.	DESCRIPTIONS	DATE
	FOR USE	

REVISIONS

SEAL

SEAL

NOTE
FOR USE WITH THE FOLLOWING
IN-FILL GRINDER "ME" PKGS ONLY

3PH/480VAC/4-11HP

HILLSBOROUGH COUNTY
PUBLIC UTILITIES
ENGINEERING & ENVIRONMENTAL SERVICES GROUP
925 E. TWIGGS STREET/TAMPA FLORIDA 33602/PH. (813) 272-5977

SMALL NEIGHBORHODD GRINDER
PUMP STATION
ELECTRICAL, CONTROL & INSTRUMENTATION

ELECTRICAL SITE PLAN AND DETAILS
(3PH)(480V/4-11 HP)

DATE:	APRIL 2015
PROJ. #	T15001
DRAWN	
DESIGNED	
CHECKED	
PROJ. MGR.	

SCALE
HORIZONTAL:
VERTICAL: NA

FILE NUMBER
DRAWING NUMBER
E-0.2

STATUS: ---
REVISION

NOTES:

1. REFER TO SHT. E-1.2 FOR BILL OF MATERIAL, NAMEPLATE LEGEND AND ELECTRICAL SIZING; E-1.3 THRU E-1.6 FOR SCHEMATICS.
2. WELDED CABINET DIVIDER SHALL PROVIDE COMPLETE ISOLATION BETWEEN CABINET HALVES.
3. ATTACH SUN-SHIELD WITH STAINLESS STEEL HARDWARE. TYPICAL.
4. REMOVAL LIFTING EYE SOCKET. IMMEDIATELY AFTER CABINET INSTALLATION, INSTALL SS PLUG BOLT AND RUBBER WASHER TO PROVIDE WATER-TIGHT SEAL. TYPICAL (2).
5. INSTALL PASS-THROUGH CABLE FITTINGS AT DIVIDER PLATE (BOTTOM & CENTERED) TYP. 3 (POWER, COMM, CONTROL).
6. SEE DWG. E1.2 FOR LIST OF MAJOR COMPONENTS ITEMS SHOWN KEYED "⟨XX⟩" AND FOR NAME PLATE SCHEDULE.

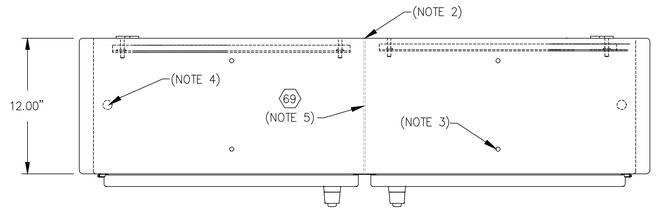

TOP VIEW

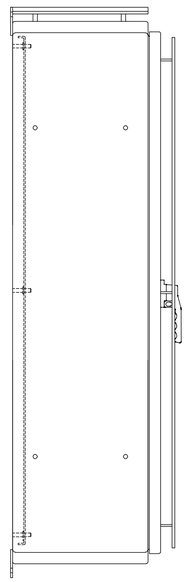

LEFT SIDE VIEW

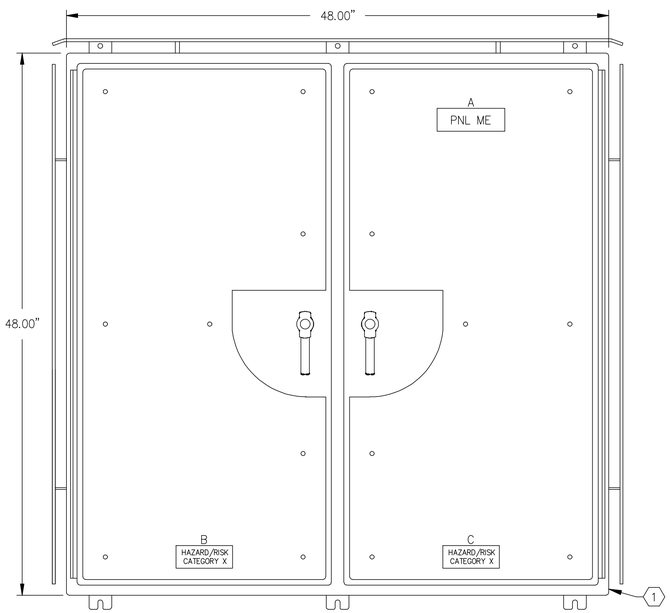

FRONT VIEW

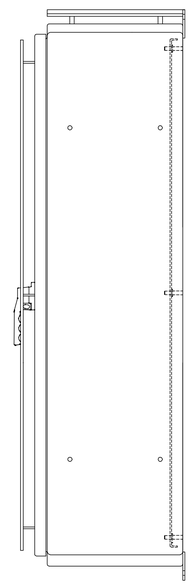

RIGHT SIDE VIEW

EXTERIOR ELECTRICAL/CONTROL CABINET, (ME)

REV.NO.	DESCRIPTIONS	DATE
	FOR USE	

REVISIONS

SEAL

SEAL

NOTE
FOR USE WITH THE FOLLOWING
IN-FILL GRINDER "ME" PKGS ONLY

3PH/480VAC/4-11HP

HILLSBOROUGH COUNTY
PUBLIC UTILITIES
ENGINEERING & ENVIRONMENTAL SERVICES GROUP
925 E. TWIGGS STREET/TAMPA FLORIDA 33602/PH. (813) 272-5977

SMALL NEIGHBORHOOD GRINDER
PUMP STATION
ELECTRICAL, CONTROL & INSTRUMENTATION

ELECTRICAL/CONTROL ENCLOSURE
EXTERIOR LAYOUT
(3PH)(480V/4-11 HP)

DATE:	APRIL 2015
PROJ. #	T15001
DRAWN	
DESIGNED	
CHECKED	
PROJ. MGR.	

SCALE
HORIZONTAL:
VERTICAL: NA

FILE NUMBER
DRAWING NUMBER
E-1.0

STATUS: ---
REVISION

NOTES:

1. REFER TO SHT. E-1.2 FOR BILL OF MATERIAL, NAMEPLATE LEGEND AND ELECTRICAL SIZING; E-1.3 THRU E-1.6 FOR SCHEMATICS.
2. INSTALL STAND-OFF BRACKETS AS REQ'D TO EXTEND CIRCUIT BREAKERS TO INNER DOOR.
3. DUPLEXER UNIT IS COMPLETE WITH PUMP HOA'S AND INDICATOR LIGHTS. PANEL VENDOR SHALL PROVIDE APPROPRIATELY SIZED STAND-OFF BRACKET TO MOUNT DUPLEXER SUCH THAT FRONT OF UNIT IS FLUSH WITH INNER DOOR.
4. SEE DWG. E1.2 FOR LIST OF MAJOR COMPONENTS ITEMS SHOWN KEYED "XX" AND FOR NAME PLATE SCHEDULE.

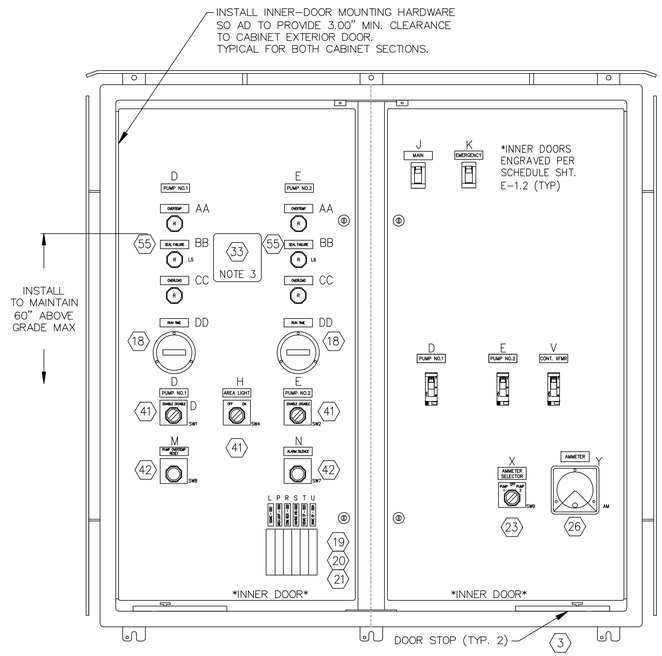

(SHOWN WITH EXTERIOR FRONT DOORS REMOVED)

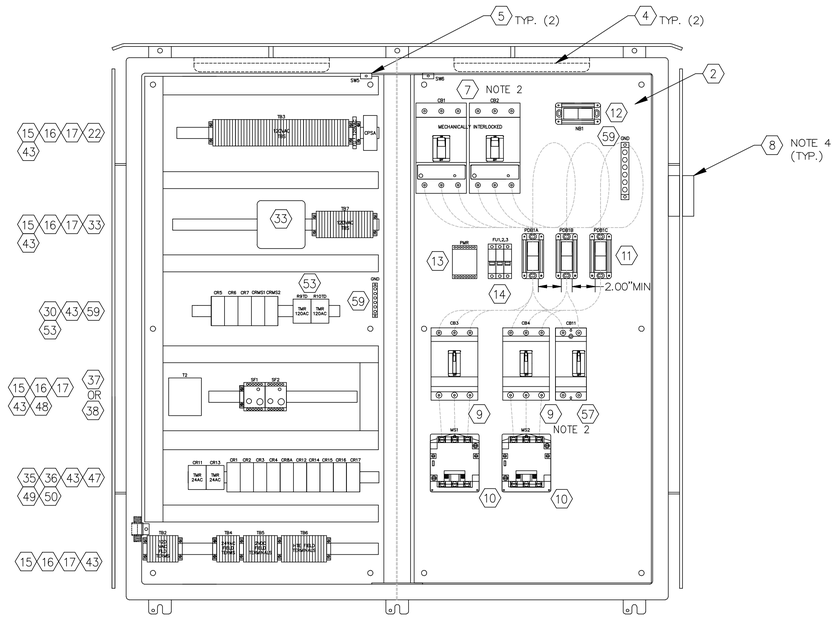

INTERIOR ELECTRICAL/CONTROL CABINET, (ME)

REV.NO.	DESCRIPTIONS	DATE
	FOR USE	

REVISIONS

SEAL

SEAL

NOTE
FOR USE WITH THE FOLLOWING
IN-FILL GRINDER "ME" PKGS ONLY

3PH/480VAC/4-11HP

HILLSBOROUGH COUNTY
PUBLIC UTILITIES
ENGINEERING & ENVIRONMENTAL SERVICES GROUP
925 E. TWIGGS STREET/TAMPA FLORIDA 33602/PH. (813) 272-5977

SMALL NEIGHBORHOOD GRINDER
PUMP STATION
ELECTRICAL, CONTROL & INSTRUMENTATION

ELECTRICAL/CONTROL ENCLOSURE
INTERIOR LAYOUT
(3PH)(480V/4-11 HP)

DATE:	APRIL 2015
PROJ. #	T15001
DRAWN	
DESIGNED	
CHECKED	
PROJ. MGR.	

SCALE
HORIZONTAL:
VERTICAL: NA

FILE NUMBER
DRAWING NUMBER
E-1.1

STATUS: ---
REVISION

LIST OF MAJOR COMPONENTS

ELECTRICAL/CONTROL CABINET (ME)

ITEM NO.	QTY	DEVICE ID	MANUFACTURER	PART NO.	DESCRIPTION
1	1		HOFFMAN	A48H4812WFSSLP-3PT (CUSTOM)	ENCLOSURE, 48"H x48"Wx 12"D, TWO-DOOR, WELDED CABINET DIVIDER, NEMA 4X, 304 SS. 3-PT LATCHES, SUN-SHIELDS, EPOXY WHITE FINISH INNER-DOOR BOTH SIDES: 43.5"Hx21"W, ALUMINUM, 0.125" THICK MIN., POWDER-COAT IRON GRAY TEXTURE FINISH (HBT2-C0009-C50)
2	2		HOFFMAN	(CUSTOM)	SUBPANEL 45"Hx21"W, 304SS, EPOXY WHITE FINISH
3	2		FABTECH	NH-45013	DOOR STOP KIT, 316 SS
4	2		LITHONIA	UCLD 18 WH	LED CABINET LIGHT, 18" W/ SWITCH
5	2	SW5, SW6	SQUARE-D	9007-AP221	DOOR SWITCH
6	1	JB4			GENERATOR TERMINATION PANEL. REFER TO SHT. E-5.0
7	2	CB1, CB2	SEE CHART THIS SHT		
			SQUARE-D	HGL36100T S29354	CIRCUIT BREAKER, MOLDED-CASE, 600V, 3 POLE, 100 AMP TRIP UNIT, MECH-INTERLOCK
			SQUARE-D	HGL36150T S29354	CIRCUIT BREAKER, MOLDED-CASE, 600V, 3 POLE, 150 AMP TRIP UNIT, MECH-INTERLOCK
8	1	SA	SQUARE-D	SDSA3650	QTY INDICATED DOES NOT INCLUDE SURGE DEVICES REQUIRED OUTSIDE OF PANEL ME SUCH AS UTILITY METER AND MAIN DISCONNECT "MD1"
9	2	CB3, CB4	SEE CHART THIS SHT.		
			SQUARE-D	HGL36015T	CIRCUIT BREAKER, MOLDED-CASE 600V, 3 POLE, 15 AMP TRIP UNIT
			SQUARE-D	HGL36020T	CIRCUIT BREAKER, MOLDED-CASE 600V, 3 POLE, 20 AMP TRIP UNIT
			SQUARE-D	HGL36025T	CIRCUIT BREAKER, MOLDED-CASE 600V. 3 POLE, 25 AMP TRIP UNIT
			SQUARE-D	HGL36030T	CIRCUIT BREAKER, MOLDED-CASE, 600V, 3 POLE. 30 AMP TRIP UNIT
			SQUARE-D	HGL36060T	CIRCUIT BREAKER, MOLDED-CASE, 600V, 3 POLE. 60 AMP TRIP UNIT
10	2	MS1, MS2	SEE CHART THIS SHT.		
			SQUARE-D	8536-SEO2-V025	CONTACTOR. 3 POLE, SIZE 0, 18A CONT. FURNISH THERMAL OVERLOADS
			SQUARE-D	8536-SCO3-V025	CONTACTOR. 3 POLE, SIZE 1, 27A CONT. FURNISH THERMAL OVERLOADS
			SQUARE-D	8536-SDO1-V025	CONTACTOR, 3 POLE, SIZE 2, 45A CONT. FURNISH THERMAL OVERLOADS
	2		SQUARE-D	P/N 9999 S04	O/L ISLOLATED ALARM CONTACTS, NO/NC
11	3	PDB1A.B,C	BUSSMANN	16325-1	POWER DISTRIBUTION BLK, 1 POLE, 350A, 600VAC, PRIM: 2 CONN 14-2/0 CU, SEC:6 CONN 14-4 CU
12	1	NB1	BUSSMANN	16325-1	POWER DISTRIBUTION BLK, 1 POLE, 350A 600VAC. PRIM: 2 CONN 14-2/0 CU, SEC:6 CONN 14-4 CU
13	1	PMR	MACROMATIC	PMPU	PHASE MONITOR RELAY
			SQUARE-D	8501NR51	RELAY BASE
14	1	FU1,FU2,FU3	SQUARE-D	DFCC3V	3 POLE FUSE HOLDER
	3		BUSSMANN	LP-CC-1	1 AMP CLASS CC FUSE
15	76		ENTRELEC	115 116.07	TERMINAL BLOCK, 30A
16	10		ENTRELEC	118 368.16	TERMINAL BLOCK END BARRIER
17	19		WAGO	249-117	TERMINAL BLOCK END STOP
18	2	ETM1, ETM2	CRAMER	6X144	ELAPSED TIME METER 120V
19	1	CB12	SQUARE-D	QOU1303100	CIRCUIT BREAKER, 1 POLE, 30 AMP, W/PANEL MOUNT BRACKETS
20	4	CB20, CB22, CB23, CB24	SQUARE-D	QOU1103100	CIRCUIT BREAKER, 1 POLE, 10 AMP, W/PANEL MOUNT BRACKETS
21	1	CB21	SQUARE-D	QOU1153100	CIRCUIT BREAKER, 1 POLE, 15 AMP, W/PANEL MOUNT BRACKETS
22	1	CPSA	CITEL	DS425--120	SURGE ARRESTOR, 120VAC
23	1	SW9	SQUARE-D	9001SKSA3BH3	SELECTOR SWITCH, 3-POS, CENTER OFF, MAINTAINED, BLACK, WITH STANDARD LEGEND PLATE MARKED AS SHOWN
24					*NOT USED
25					*NOT USED
26	1	AM	YOKOGAWA	250 340 SERIES	AMMETER, SEE CROSS REFRENCE TABLE
27					*NOT USED
28					*NOT USED
29					*NOT USED
30	1	CRMS1,CRMS2,CR5,CR6, CR7	SQUARE-D	RXM4A32F7	RELAY. 120VAC, 4D PT, 5A CONTACTS
			SQUARE-D	RXZE2M114	RELAY BASE
31					*NOT USED
32					*NOT USED
33	1	MDC	MPE INC	010-120-122P	DUPLEX CONTROLLER, WITH PUMP HOA'S AND INDICATOR LIGHTS
	1				STAND-OFF BRACKET BY PANEL VENDOR
	1		MPE INC	SD12-PC (12 PIN SOCKET)	SOCKET
34					*NOT USED
35	10	CR1,2,3,4,8A,12,15, 14,16,17	SQUARE-D	RXM4A31B7	CONTROL RELAY, 24VAC COIL 4PDT, 5A CONTACTS
36	10		SQUARE-D	RXZE2M114	RELAY BASE
37	2	SF1, SF2	CROUZET/SYRELEC	PNRU11:0A/BE	LEAK DETECTION RELAY/SEAL-FAIL RELAY (FOR NON-FLYGT PUMPS)
	2		SQUARE-D	8501NR51	RELAY BASE
38	2		ITT/FLYGT	MINI-CAS II	SUPERVISION RELAY FOR TEMPERATURE AND LEAKAGE SENSORS (FOR FLYGT PUMPS ONLY)
			SQUARE-D	8501NR61	RELAY BASE
39					*NOT USED
40	1	RECP1	HUBBELL	GFTR15GY	RECEPTACLE, 125VAC, DUPLEX, GFCI, 15.A, 10kA SCCR
	1		THOMAS & BETTS	IH3-2-LM	RECEPTACLE BOX, DIE-CAST ALUMINUM. WEATHERPROOF, (3) 3/4" HOLES
	1		IN TERMATIC	WP1010MXD	RECEPTACLE COVER, DIE-CAST ALUMINUM. WEATHERPROOF, WHILE-IN-USE
41	3	SW1, SW2,SW4	SQUARE-D	9001 SKS11BH2	SELECTOR SWITCH, 2-POS, MAINTAINED, BLACK, WITH STANDARD LEGEND PLATE MARKED AS SHOWN
42	2	SW7,SW8	SQUARE-D	9001 SKR1U	MOMENTARY PUSHBUTTON, FLUSH, BLACK
43	12		IBOCO	IB-T1-1030W	WIRE DUCT, 1"W x 3"H, WHITE (PER FT, 6' MIN)
	12		IBOCO	B-T1-1530W	WIRE DUCT, 1.5"W x 3"H, WHITE (PER FT, 6' MIN)
44	1	AL	FEDERAL SIGNAL	141ST-120R	STROBE LIGHT, RED, 120VAC (REMOTE FROM ME)
45	1	AH	FEDERAL SIGNAL	350-120-30 w/WB	ALARM HORN, 120VAC, w/ALUMINUM WP HOUSING (REMOTE FROM ME)
46					*NOT USED
47	1	CR13	SQUARE-D	9050ICK11V14	RELAY, 24VAC, ON TIME-DELAY, 1-10 SECONDS
	1		SQUARE-D	8501NR51	RELAY BASE
48	1	T2	SQUARE-D	9070T100D23	TRANSFORMER, 120V/24V, 1PH, 100VA
49	1	CR11	SQUARE-D	9050ICK21V14	RELAY, 24VAC, OFF TIME-DELAY, 1-10 SECONDS
50	1		SQUARE-D	8501NR61	RELAY BASE
51					*NOT USED
52					*NOT USED
53	2	R9TD,R10TD	SQUARE-D	9050ICK11V20	RELAY,120VAC, TIME-DELAY, 1-10 SECONDS
	2		SQUARE-D	8501NR51	RELAY BASE
54					
55	6	L1, L2, L3, L4, L5, L6	SQUARE-D	9001SKP38LRR9	PILOT LIGHT 30MM LED 120VAC RED
56					*NOT USED
57	1	CB11	SQUARE-D	HGL26015	CIRCUIT BREAKER, MOLDED-CASE, 600V, 2 POLE, 15 AMP
58	1	T1	SQUARE-D	351FSS	3kVA 480VAC - 120VAC SINGLE PHASE TRANSFORMER W/ ENCLOSURE
59	1		SQUARE-D	PK0GTA6	GROUND BAR, 6 CONN 14-1/0 CU
60					*NOT USED
61					*NOT USED
62					*NOT USED
63					*NOT USED
64					*NOT USED
65					*NOT USED
66					*NOT USED
67					*NOT USED
68					*NOT USED
69	1		HUBBELL	ZS105	CABLE FITTING, PASS-THROUGH (POWER)
	1		HUBBELL	2S108	CABLE FITTING, PASS-THROUGH (COMMUNICATION)
	1		HUBBELL	2S210	CABLE FITTING, PASS-THROUGH (CONTROL)
70					*NOT USED

NAMEPLATE SCHEDULE

ELECTRICAL/CONTROL CABINET (ME)

N.P. NO	QTY	PLATE COLOR/SIZE	LRT COLOR/SIZE	ENGRAVING (LINE1/LINE 2/ETC.)
A	1	BLK / 2.00"H X 6.00" W	WHT / 1/2"	PNL ME
B	1	BLK / 2.00"H X 5.00" W	WHT / 3/8"	HAZARD/RISK / CATEGORY X
C	1	BLK / 2.00"H X 5.00" W	WHT / 3/8"	HAZARD/RISK / CATEGORY X
D	3	ENG / 0.75"H X 2.50" W	ENG / 1/4"	PUMP NO.1
E	3	ENG / 0.75"H X 2.50" W	ENG / 1/4"	PUMP NO.2
F				*NOT USED
G	2	STANDARD LEGEND PLATE		ENABLE/DISABLE
H	1	ENG / 0.75"H X 2.50" W	ENG / 1/4"	AREA LIGHT
I	2	ENG / 2.25"H X 2.25" W	ENG / 3/16"	OFF ON
J	1	ENG / 0.75"H X 2.50" W	ENG / 1/4"	MAIN CB1
K	1	ENG / 0.75"H X 2.50" W	ENG / 1/4"	EMERGENCY - CB2
L	1	ENG / 0.50"H X 2.00" W	ENG / 3/16"	120VAC - CB12
M	1	ENG / 0.75"H X 2.50" W	ENG / 1/4"	PUMP OVERTEMP / RESET
N	1	ENG / 0.75"H X 2.50" W	ENG / 1/4"	ALARM SILENCE
O				*NOT USED
P	1	ENG / 0.50"H X 2.00" W	ENG / 3/16"	AREA LIGHT - CB20
R	1	ENG / 0.50"H X 2.00" W	ENG / 3/16"	CONV. RECP - CB21
S	1	ENG / 0.50"H X 2.00" W	ENG / 3/16"	HIGHTIDE (HTE) - CB22
T	1	ENG / 0.50"H X 2.00" W	ENG / 3/16"	120VAC CONTROL POWER - CB23
U	1	ENG / 0.50"H X 2.00" W	ENG / 3/16"	24VAC CONTROL POWER - CB24
V	1	ENG / 0.50"H X 2.00" W	ENG / 1/4"	CONTROL XFMR - CB11
W	1	STANDARD LEGEND PLATE		PUMP NO. 1/OFF/PUMP NO. 2
X	1	ENG / 0.50"H X 2.00" W	ENG / 1/4"	AMMETER SELECTOR
Y	1	ENG / 0.50"H X 2.00" W	ENG / 1/4"	AMMETER
AA	2	ENG / 0.50"H X 2.00" W	ENG / 3/16"	OVERTEMP
BB	2	ENG / 0.50"H X 2.00" W	ENG / 3/16"	SEAL FAILURE
CC	2	ENG / 0.50"H X 2.00" W	ENG / 3/16"	OVERLOAD
DD	2	ENG / 0.50"H X 2.00" W	ENG / 3/16"	RUNTIME

CROSS REFERENCE TABLE

SEE DWG E-1.3 NOTE 4

SERVICE VOLTAGE	PUMP HP*	MTR-MD1 (AWG)	MD1-ME/CB1 JB1/JB4-CB2/N (AWG)	CB1-PDB1 CB2-PDB1 (AWG)	MD1 CB1 CB2	PDB1-PMR (AWG)	CB3 CB4	MS1 MS2	PDB1-CB3 PDB1-CB4 CB3-MS1 CB4-MS2 MS1-JB1 MS2-JB1	JB1-M1 JB2-M2	PDB1-CB11 CB11-XFM1 (AWG)	CB11	AMMETER SCALE/ CT RATIO
240VAC, 3PH, 4W	4	3-#1/0, 1-#2 N	3-#1/0, 1-#2 N, 1-#8 G	3-#1/0	JGL36150	3-#14	HGL36020	SIZE 1	3-#12	PER MANUF	2-#10	N/A	15A/15:5
240VAC, 3PH, 4W	6	3-#1/0, 1-#2 N	3-#1/0, 1-#2 N, 1-#8 G	3-#1/0	JGL36150	3-#14	HGL36030	SIZE 2	3-#10	PER MANUF	2-#10	N/A	30A/30:5
240VAC, 3PH, 4W	11	3-#1/0, 1-#2 N	3-#1/0, 1-#2 N, 1-#8 G	3-#1/0	JGL36150	3-#14	HGL36060	SIZE 2	3-#8	PER MANUF	2-#10	N/A	50A/50:5
480VAC, 3PH, 4W	4	3-#1/0, 1-#2 N	3-#1/0, 1-#2 N, 1-#8 G	3-#1/0	JGL36150	3-#14	HGL36015	SIZE 0	3-#12	PER MANUF	2-#10	HGL26015	10A/10:5
480VAC, 3PH, 4W	6	3-#1/0, 1-#2 N	3-#1/0, 1-#2 N, 1-#8 G	3-#1/0	JGL36150	3-#14	HGL36020	SIZE 1	3-#12	PER MANUF	2-#10	HGL26015	15A/15:5
480VAC, 3PH, 4W	11	3-#1/0, 1-#2 N	3-#1/0, 1-#2 N, 1-#8 G	3-#1/0	JGL36150	3-#14	HGL36025	SIZE 2	3-#12	PER MANUF	2-#10	HGL26015	30A/30:5

EQUIPMENT AND CONDUCTORS SHALL COMPLY WITH NEC AND ALL OTHER APPLICABLE CODES, INCLUDING EXISTING COUNTY COUNTY STANDARDS.

*HP RATINGS LISTED ARE BASED ON STANDARD FLYGT GRINDER PUMP SIZES

DESIGN BASIS NOTE:

THIS DRAWING REPRESENTS THE STANDARD DESIGN FOR ALL HILLSBOROUGH COUNTY STANDARD IN-FILL GRINDER PUMPING STATIONS. IT WAS DEVELOPED TO IMPROVE RELIABILITY AND MAINTAINABILITY, MINIMIZE SPARE PARTS AND INCREASE SERVICE LIFE. ALL REQUESTS FOR DEVIATION FROM THIS STANDARD MUST BE MADE IN WRITING AND WRITTEN APPROVAL RECEIVED BEFORE MODIFICATIONS ARE MADE. CONTRACTOR IS RESPONSIBLE FOR ALL COSTS NECESSARY TO RESTORE UNAUTHORIZED MODIFICATIONS.

DESIGN ENGINEER NOTE: *THIS IS NOT A CONSTRUCTION DRAWING*

DESIGN ENGINEER SHALL REFER TO ELECTRICAL DRAWINGS, MECHANICAL DRAWINGS, AND THE HILLSBOROUGH COUNTY WATER AND WASTEWATER TECHNICAL SPECIFICATION IN ORDER TO COORDINATE THE MECHANICAL AND ELECTRICAL INSTALLATIONS, DESIGN CONSTRUCTION DRAWINGS AND SPECIFICATIONS (IF DEEMED NECESSARY BY THE DESIGN ENGINEER) MUST BE PREPARED IN ACCORDANCE WITH F.S. 471 AND RULES 61G.

REV.NO.	DESCRIPTIONS	DATE
	FOR USE	

REVISIONS

SEAL

SEAL

NOTE
FOR USE WITH THE FOLLOWING
IN-FILL GRINDER "ME" PKGS ONLY

3PH/480VAC/4-11HP

HILLSBOROUGH COUNTY
PUBLIC UTILITIES
ENGINEERING & ENVIRONMENTAL SERVICES GROUP
925 E. TWIGGS STREET/TAMPA FLORIDA 33602/PH. (813) 272-5977

SMALL NEIGHBORHOOD GRINDER
PUMP STATION
ELECTRICAL, CONTROL & INSTRUMENTATION

ELECTRICAL/CONTROL ENCLOSURE
BILL OF MATERIAL & EQUIP SIZING CHART
(3PH)(480V/4-11 HP)

DATE:	APRIL 2015
PROJ. #	T15001
DRAWN	
DESIGNED	
CHECKED	
PROJ. MGR.	

SCALE
HORIZONTAL:
VERTICAL: NA

FILE NUMBER

DRAWING NUMBER
E-1.2

STATUS: ---

REVISION

ELECTRICAL/CONTROL CABINET, (ME)

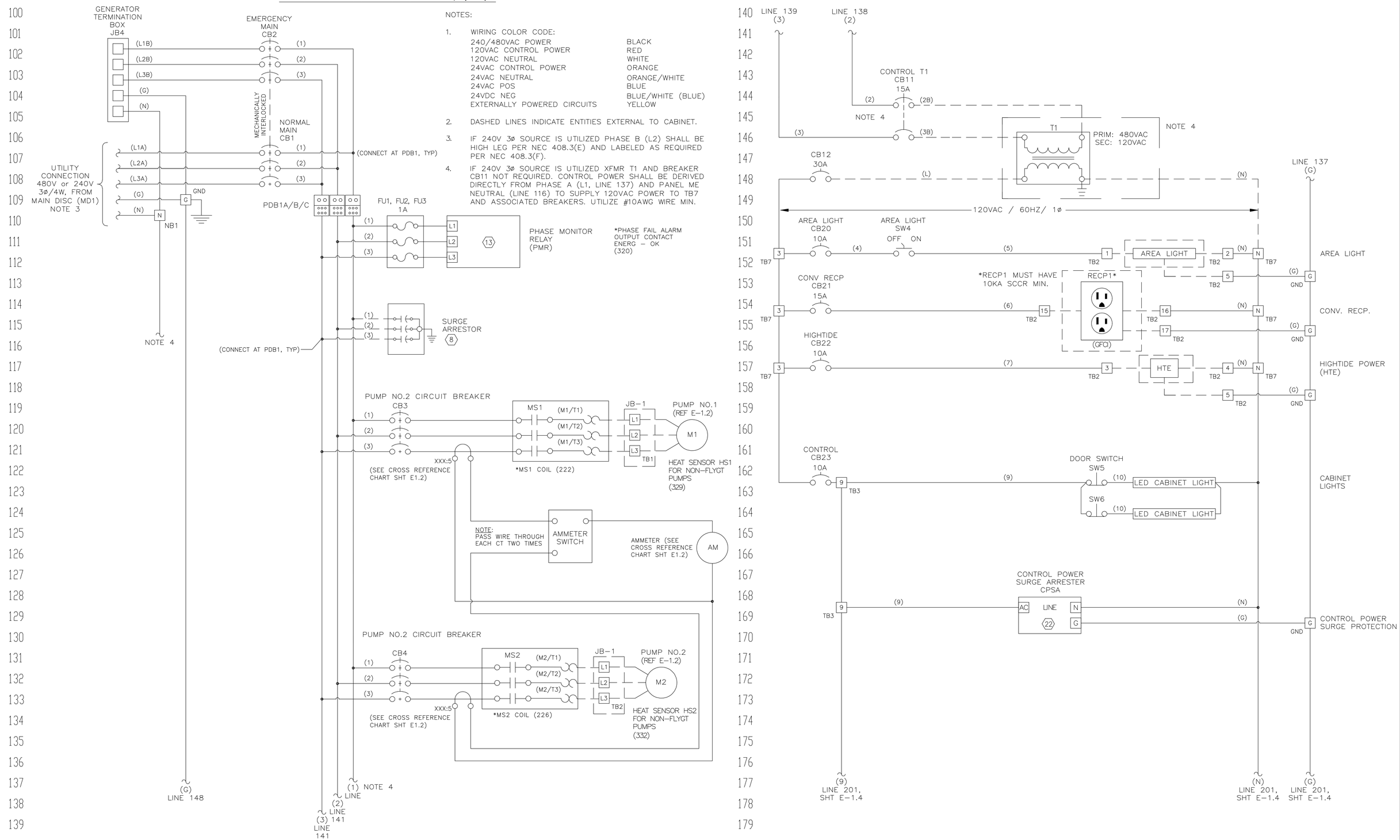

NOTES:

1. WIRING COLOR CODE:

240/480VAC POWER	BLACK
120VAC CONTROL POWER	RED
120VAC NEUTRAL	WHITE
24VAC CONTROL POWER	ORANGE
24VAC NEUTRAL	ORANGE/WHITE
24VAC POS	BLUE
24VDC NEG	BLUE/WHITE (BLUE)
EXTERNALLY POWERED CIRCUITS	YELLOW

2. DASHED LINES INDICATE ENTITIES EXTERNAL TO CABINET.
3. IF 240V 3ø SOURCE IS UTILIZED PHASE B (L2) SHALL BE HIGH LEG PER NEC 408.3(E) AND LABELED AS REQUIRED PER NEC 408.3(F).
4. IF 240V 3ø SOURCE IS UTILIZED XFMR T1 AND BREAKER CB11 NOT REQUIRED. CONTROL POWER SHALL BE DERIVED DIRECTLY FROM PHASE A (L1, LINE 137) AND PANEL ME NEUTRAL (LINE 116) TO SUPPLY 120VAC POWER TO TB7 AND ASSOCIATED BREAKERS. UTILIZE #10AWG WIRE MIN.

REV.NO.	DESCRIPTIONS	DATE
	FOR USE	

REVISIONS

SEAL

SEAL

NOTE
FOR USE WITH THE FOLLOWING
IN–FILL GRINDER "ME" PKGS ONLY

3PH/480VAC/4–11HP

HILLSBOROUGH COUNTY
PUBLIC UTILITIES
ENGINEERING & ENVIRONMENTAL SERVICES GROUP
925 E. TWIGGS STREET/TAMPA FLORIDA 33602/PH. (813) 272–5977

SMALL NEIGHBORHOOD GRINDER
PUMP STATION
ELECTRICAL, CONTROL & INSTRUMENTATION

ELECTRICAL/CONTROL ENCLOSURE
ELECTRICAL SCHEMATICS
(3PH)(480V/4-11 HP)

DATE:	APRIL 2015
PROJ. #	T15001
DRAWN	
DESIGNED	
CHECKED	
PROJ. MGR.	

SCALE
HORIZONTAL:
VERTICAL: NA

FILE NUMBER
DRAWING NUMBER
E-1.3

STATUS: ---
REVISION

ELECTRICAL/CONTROL CABINET, (ME) CONTINUED

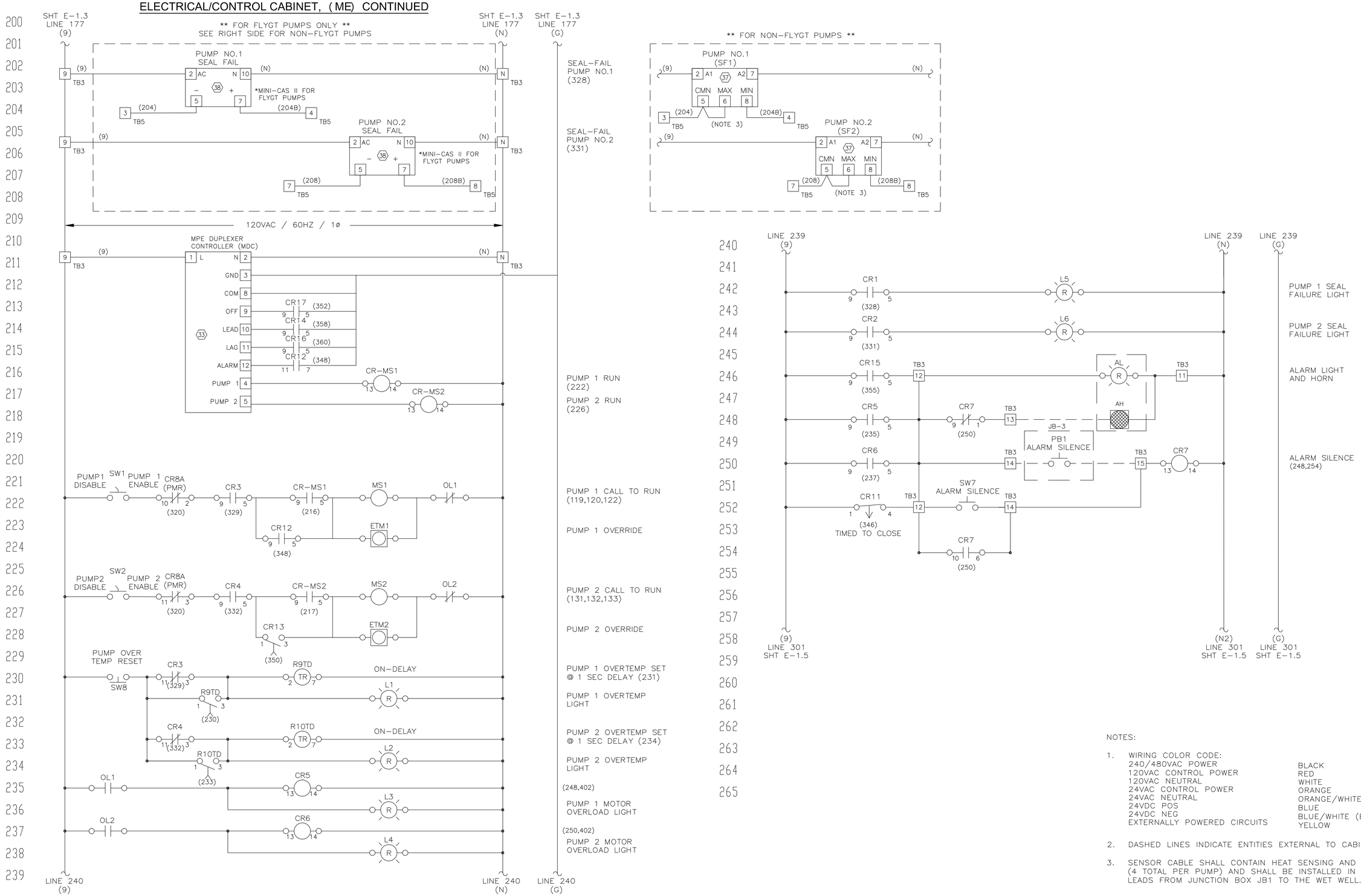

NOTES:

1. WIRING COLOR CODE:

240/480VAC POWER	BLACK
120VAC CONTROL POWER	RED
120VAC NEUTRAL	WHITE
24VAC CONTROL POWER	ORANGE
24VAC NEUTRAL	ORANGE/WHITE
24VDC POS	BLUE
24VDC NEG	BLUE/WHITE (BLUE)
EXTERNALLY POWERED CIRCUITS	YELLOW

2. DASHED LINES INDICATE ENTITIES EXTERNAL TO CABINET.

3. SENSOR CABLE SHALL CONTAIN HEAT SENSING AND SEAL FAILURE LEADS (4 TOTAL PER PUMP) AND SHALL BE INSTALLED IN CONDUIT WITH MOTOR LEADS FROM JUNCTION BOX JB1 TO THE WET WELL.

REV.NO.	DESCRIPTIONS	DATE
	FOR USE	

REVISIONS

SEAL

SEAL

NOTE
FOR USE WITH THE FOLLOWING
IN-FILL GRINDER "ME" PKGS ONLY

3PH/480VAC/4-11HP

HILLSBOROUGH COUNTY
PUBLIC UTILITIES
ENGINEERING & ENVIRONMENTAL SERVICES GROUP
925 E. TWIGGS STREET/TAMPA FLORIDA 33602/PH. (813) 272-5977

SMALL NEIGHBORHOOD GRINDER
PUMP STATION
ELECTRICAL, CONTROL & INSTRUMENTATION

ELECTRICAL/CONTROL ENCLOSURE
ELECTRICAL SCHEMATICS
(3PH)(480V/4-11 HP)

DATE:	APRIL 2015
PROJ. #	T15001
DRAWN	
DESIGNED	
CHECKED	
PROJ. MGR.	

SCALE
HORIZONTAL:
VERTICAL: NA

FILE NUMBER
DRAWING NUMBER
E-1.4

STATUS: ---
REVISION

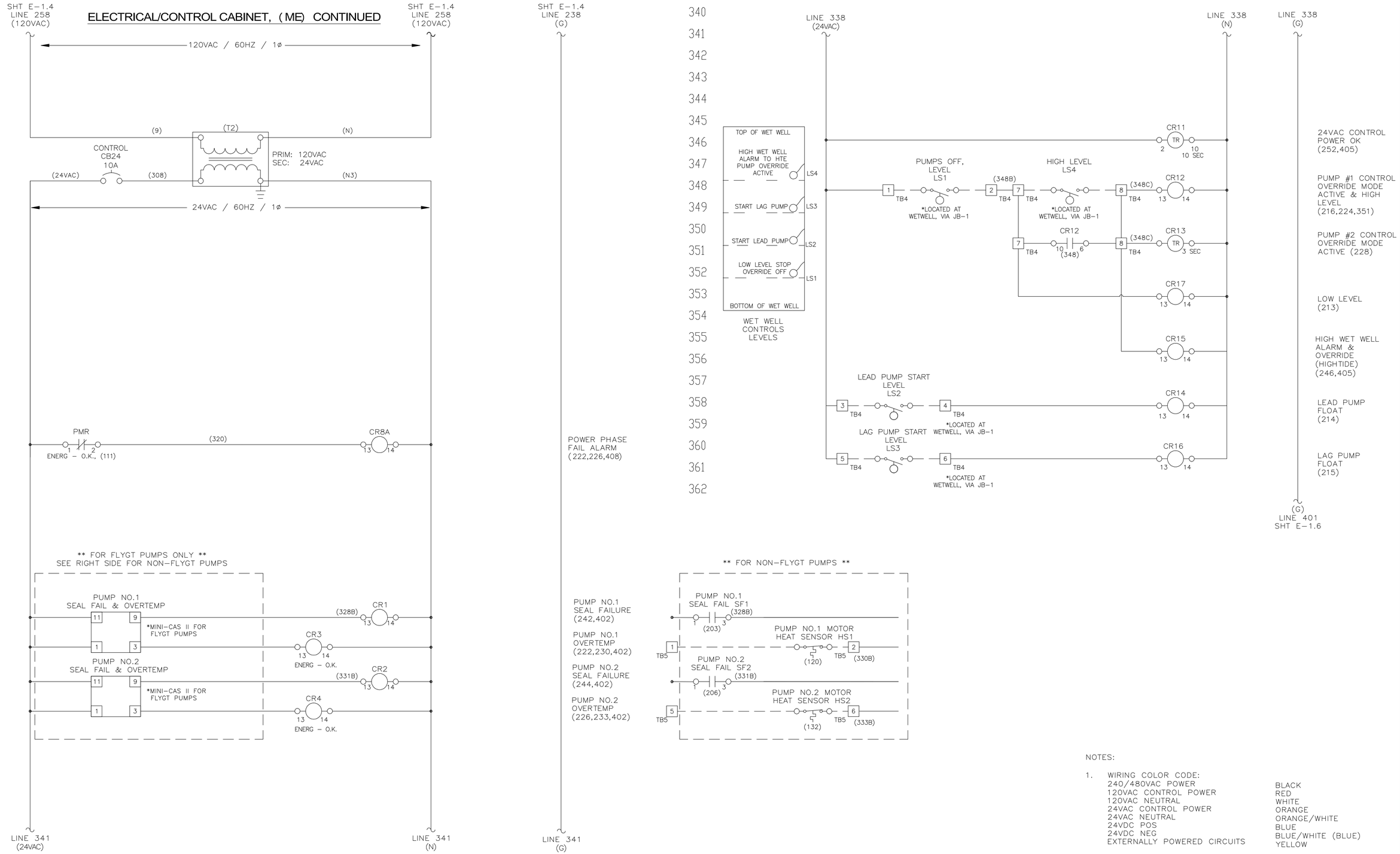

NOTES:

1. WIRING COLOR CODE:

240/480VAC POWER	BLACK
120VAC CONTROL POWER	RED
120VAC NEUTRAL	WHITE
24VAC CONTROL POWER	ORANGE
24VAC NEUTRAL	ORANGE/WHITE
24VDC POS	BLUE
24VDC NEG	BLUE/WHITE (BLUE)
EXTERNALLY POWERED CIRCUITS	YELLOW

2. DASHED LINES INDICATE ENTITIES EXTERNAL TO CABINET

REV.NO.	DESCRIPTIONS	DATE
	FOR USE	

REVISIONS

SEAL

SEAL

NOTE
FOR USE WITH THE FOLLOWING
IN-FILL GRINDER "ME" PKGS ONLY

3PH/480VAC/4-11HP

HILLSBOROUGH COUNTY
PUBLIC UTILITIES
ENGINEERING & ENVIRONMENTAL SERVICES GROUP
925 E. TWIGGS STREET/TAMPA FLORIDA 33602/PH. (813) 272-5977

SMALL NEIGHBORHOOD GRINDER
PUMP STATION
ELECTRICAL, CONTROL & INSTRUMENTATION

ELECTRICAL/CONTROL ENCLOSURE
ELECTRICAL SCHEMATICS
(3PH)(480V/4-11 HP)

DATE:	APRIL 2015
PROJ. #	T15001
DRAWN	
DESIGNED	
CHECKED	
PROJ. MGR.	

SCALE
HORIZONTAL:
VERTICAL: NA

FILE NUMBER
DRAWING NUMBER
E-1.5

STATUS: ---
REVISION

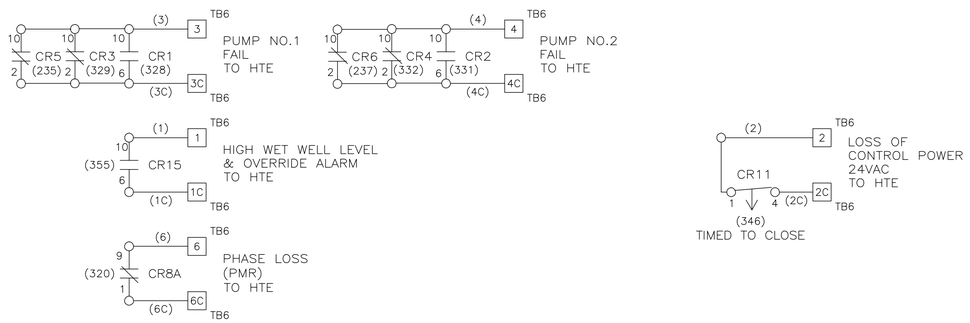

SHT E-1.5
LINE 362
(G)

LINE 438
(G)

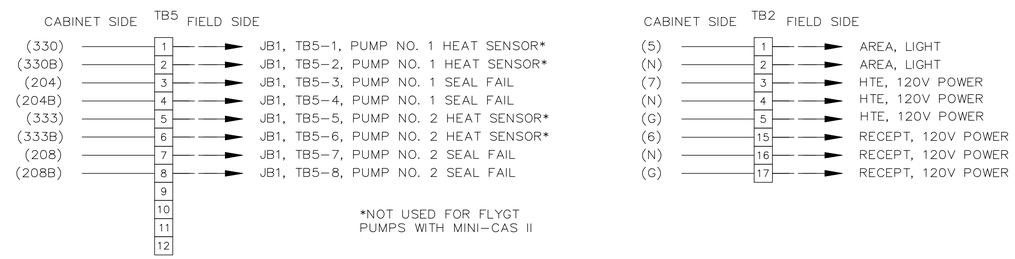

NOTES:

1. WIRING COLOR CODE:

240/480VAC POWER	BLACK
120VAC CONTROL POWER	RED
120VAC NEUTRAL	WHITE
24VAC CONTROL POWER	ORANGE
24VAC NEUTRAL	ORANGE/WHITE
24VDC POS	BLUE
24VDC NEG	BLUE/WHITE (BLUE)
EXTERNALLY POWERED CIRCUITS	YELLOW

2. DASHED LINES INDICATE ENTITIES EXTERNAL TO CABINET.

LINE 440
(G)

(G)

REV.NO.	DESCRIPTIONS	DATE
	FOR USE	

REVISIONS

SEAL

SEAL

NOTE
FOR USE WITH THE FOLLOWING
IN-FILL GRINDER "ME" PKGS ONLY

3PH/480VAC/4-11HP

HILLSBOROUGH COUNTY
PUBLIC UTILITIES
ENGINEERING & ENVIRONMENTAL SERVICES GROUP
925 E. TWIGGS STREET/TAMPA FLORIDA 33602/PH. (813) 272-5977

SMALL NEIGHBORHOOD GRINDER
PUMP STATION
ELECTRICAL, CONTROL & INSTRUMENTATION

ELECTRICAL/CONTROL ENCLOSURE
ELECTRICAL SCHEMATICS
(3PH)(480V/4-11 HP)

DATE:	APRIL 2015
PROJ. #	T15001
DRAWN	
DESIGNED	
CHECKED	
PROJ. MGR.	

SCALE
HORIZONTAL:
VERTICAL: NA

FILE NUMBER
DRAWING NUMBER
E-1.6

STATUS:
REVISION

LIST OF MAJOR COMPONENTS

ITEM NO.	QTY	DEVICE ID	MANUFACTURER	PART NO.	DESCRIPTION
1	1		SQUARE-D	9001-KYSS100	ENCLOSURE,13.3"H x11.3"Wx 5.6"D, NEMA 3R, FIBERGLASS GRAY
2	1	PB1	SQUARE-D	9001-KR1BH5	PUSHBUTTON, FULL GUARD, N.O. CONTACTS

NAMEPLATE SCHEDULE

N.P. NO	QTY	PLATE COLOR/SIZE	LRT COLOR/SIZE	ENGRAVING (LINE1/LINE 2/ETC.)
A	1	BLK / 2.25"H X 2.25" W	WHT / 3/16"	ALARM SILENCE

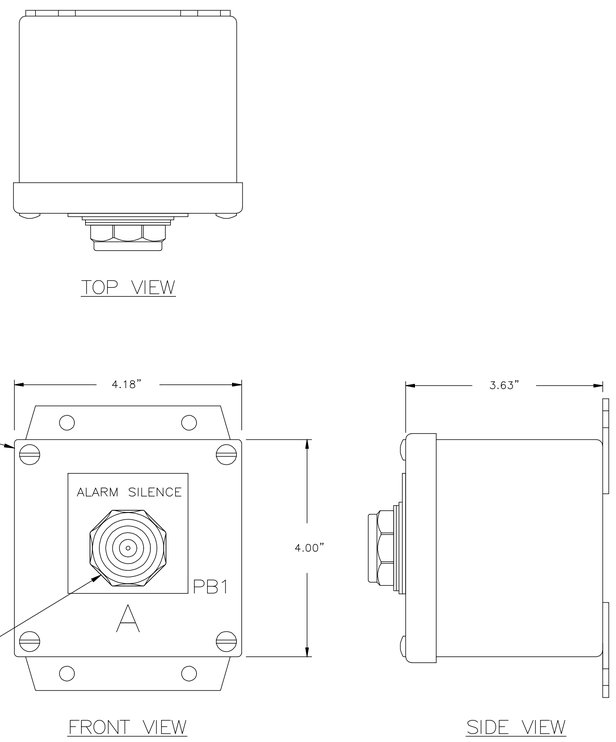

ALARM SILENCE STATION (JB-3)

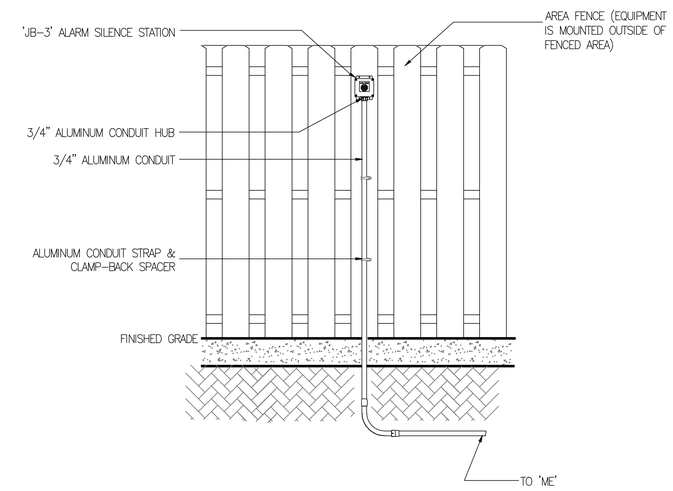

PUSHBUTTON DETAIL (FRONT ELEVATION)
N.T.S.

NOTES:

1. WIRING COLOR CODE:

230/480VAC POWER	BLACK
120VAC CONTROL POWER	RED
120VAC NEUTRAL	WHITE
24VAC CONTROL POWER	ORANGE
24VAC NEUTRAL	ORANGE/WHITE
24VDC POS	BLUE
24VDC NEG	BLUE/WHITE (BLUE)
EXTERNALLY POWERED CIRCUITS	YELLOW

REV.NO.	DESCRIPTIONS	DATE
	FOR USE	

REVISIONS

SEAL

SEAL

NOTE
FOR USE WITH THE FOLLOWING
IN-FILL GRINDER "ME" PKGS ONLY

3PH/480VAC/4-11HP

HILLSBOROUGH COUNTY
PUBLIC UTILITIES
ENGINEERING & ENVIRONMENTAL SERVICES GROUP
925 E. TWIGGS STREET/TAMPA FLORIDA 33602/PH. (813) 272-5977

SMALL NEIGHBORHOOD GRINDER
PUMP STATION
ELECTRICAL, CONTROL & INSTRUMENTATION

ALARM SILENCE STATION (JB3)
ENCLOSURE LAYOUT, DETAIL AND BILL OF MATERIAL

DATE:	APRIL 2015
PROJ. #	T15001
DRAWN	
DESIGNED	
CHECKED	
PROJ. MGR.	

SCALE
HORIZONTAL:
VERTICAL: NA

FILE NUMBER
DRAWING NUMBER
E-2.0

STATUS: ---
REVISION

LIST OF MAJOR COMPONENTS

ITEM NO.	QTY	DEVICE ID	MANUFACTURER	PART NO.	DESCRIPTION
1	1	JB1	HOFFMAN	A30H2410SSLP	ENCLOSURE,30"H x24"Wx 10"D, NEMA 4X, 304SS, EPOXY WHITE FINISH
2	1		HOFFMAN	A30P24AL	SUBPANEL 27"Hx21"W,0.10" THICK ALUMINUM
3	2	TB1,TB2	MARATHON	1333554	POWER DISTRIBUTION BLK, 3 POLE 310A, 600VAC, PRIM 1 CONN 6-350 CU SEC. 2 CONN 14-2/0
4	25	TB5, TB6	PHOENIX CONTACT	UK5-N	TERMINAL BLOCK
5	4		PHOENIX CONTACT	D-UK 4/10	TERMINAL BLOCK END BARRIER
6	4		PHOENIX CONTACT	E/UK	TERMINAL BLOCK END CLAMP
7	AR		PHOENIX CONTACT		DIN RAIL

NAMEPLATE SCHEDULE

N.P. NO	QTY	PLATE COLOR/SIZE	LRT COLOR/SIZE	ENGRAVING (LINE1/LINE 2/ETC.)
A	1	BLK / 2.00"H X 6.00" W	WHT / 1/2"	JB1

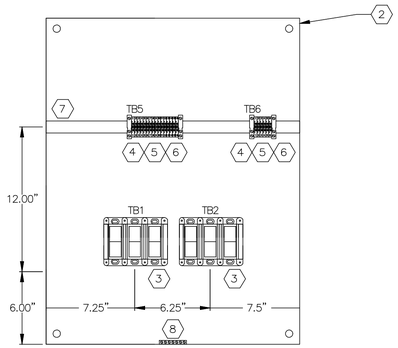

INSIDE PANEL VIEW

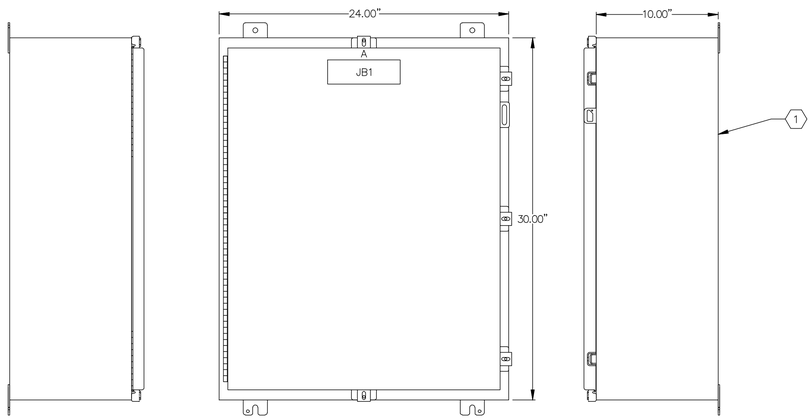

LEFT SIDE VIEW

FRONT VIEW

RIGHT SIDE VIEW

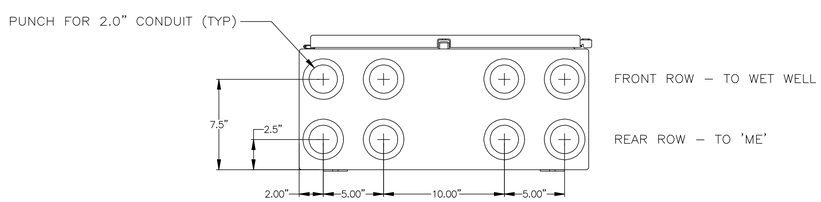

BOTTOM VIEW

JB1 ENCLOSURE LAYOUT

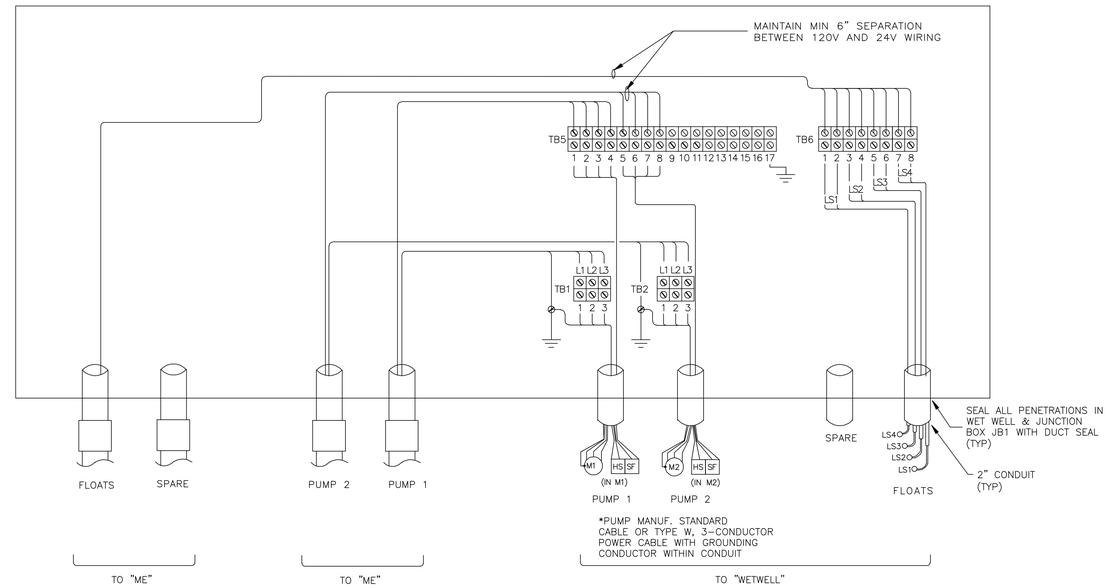

JB1 ELECTRICAL SCHEMATIC

NOTES:

1. APPLY OXIDE–INHIBITING COMPOUND ALL ELECTRICAL TERMINATION CONTACT SURFACES, INCLUDING COMPRESSION AND BOLTED CONNECTIONS. PENETROX COMPOUND BURNDY OR EQUAL PRODUCT.
2. SCREW–DOWN CABLE TIES SHALL BE 3M CABLE TIE BASE MODEL 06299 OR PANDUIT MODEL ABM112 OR APPROVED EQUAL. (SIZE AS REQ'D)
3. CONTRACTOR SHALL MOUNT TERMINALS AS SHOWN.

DESIGN BASIS NOTE:

THIS DRAWING REPRESENTS THE STANDARD DESIGN FOR ALL HILLSBOROUGH COUNTY STANDARD IN–FILL GRINDER PUMPING STATIONS. IT WAS DEVELOPED TO IMPROVE RELIABILITY AND MAINTAINABILITY, MINIMIZE SPARE PARTS AND INCREASE SERVICE LIFE. ALL REQUESTS FOR DEVIATION FROM THIS STANDARD MUST BE MADE IN WRITING AND WRITTEN APPROVAL RECEIVED BEFORE MODIFICATIONS ARE MADE. CONTRACTOR IS RESPONSIBLE FOR ALL COSTS NECESSARY TO RESTORE UNAUTHORIZED MODIFICATIONS.

DESIGN ENGINEER NOTE: *THIS IS NOT A CONSTRUCTION DRAWING*

DESIGN ENGINEER SHALL REFER TO ELECTRICAL DRAWINGS, MECHANICAL DRAWINGS, AND THE HILLSBOROUGH COUNTY WATER AND WASTEWATER TECHNICAL SPECIFICATION IN ORDER TO COORDINATE THE MECHANICAL AND ELECTRICAL INSTALLATIONS, DESIGN CONSTRUCTION DRAWINGS AND SPECIFICATIONS (IF DEEMED NECESSARY BY THE DESIGN ENGINEER) MUST BE PREPARED IN ACCORDANCE WITH F.S. 471 AND RULES 61G.

REV.NO.	DESCRIPTIONS	DATE
	FOR USE	

REVISIONS

SEAL

SEAL

NOTE
FOR USE WITH THE FOLLOWING
IN–FILL GRINDER "ME" PKGS ONLY

3PH/480VAC/4–11HP

HILLSBOROUGH COUNTY
PUBLIC UTILITIES
ENGINEERING & ENVIRONMENTAL SERVICES GROUP
925 E. TWIGGS STREET/TAMPA FLORIDA 33602/PH. (813) 272–5977

SMALL NEIGHBORHOOD GRINDER
PUMP STATION
ELECTRICAL, CONTROL & INSTRUMENTATION

WET WELL JUNCTION BOX (JBI)
CABINET LAYOUT, ELECTRICAL SCHEMATIC
AND BILL OF MATERIAL

DATE:	APRIL 2015
PROJ. #	T15001
DRAWN	
DESIGNED	
CHECKED	
PROJ. MGR.	

SCALE
HORIZONTAL:
VERTICAL: NA

FILE NUMBER
DRAWING NUMBER
E-3.0

STATUS: ---
REVISION

LIST OF MAJOR COMPONENTS

ELECTRICAL/CONTROL CABINET (HTE)

ITEM NO.	QTY	DEVICE ID	MANUFACTURER	PART NO.	DESCRIPTION
1	1	"HTE"	STAHLIN	VJ1210HWPL2	ENCLOSURE,13.3"H x11.3"Wx 5.6"D, NEMA 3R, FIBERGLASS GRAY, WITH HINGED FRONT PANEL.
2					*NOT USED
3	1	"HTT"	HIGHTIDE	HTT-E10-AC-IR	SATELITE COMMUNICATOR W/ 120V SURGE PROTECTION (BY VENDOR). IRIDIUM ANTENNA WITH ANGLE BRACKET AND ANTENNA SURGE PROTECTOR REQUIRED (BY VENDOR). 12V POWER SUPPLY AND BATTERY (BY VENDOR).
4					*NOT USED
5	AR				WIRE DUCT 1.00"W X 2.00"H
6					*NOT USED

NAMEPLATE SCHEDULE

ELECTRICAL/CONTROL CABINET (HTE)

N.P. NO	QTY	PLATE COLOR/SIZE	LRT COLOR/SIZE	ENGRAVING (LINE1/LINE 2/ETC.)
A	1	BLK / 2.00"H X 6.00" W	WHT / 1/2"	PNL "HTE"

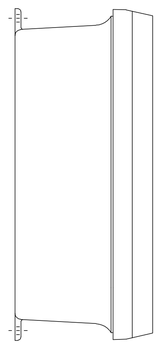

LEFT SIDE VIEW

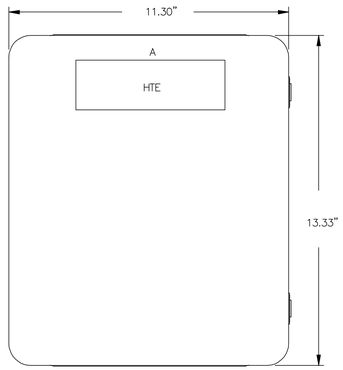

FRONT VIEW

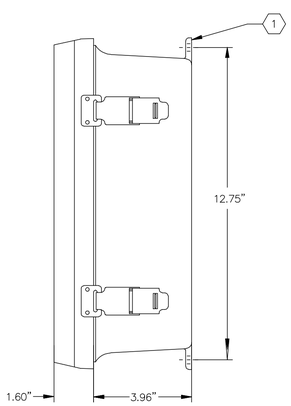

RIGHT SIDE VIEW

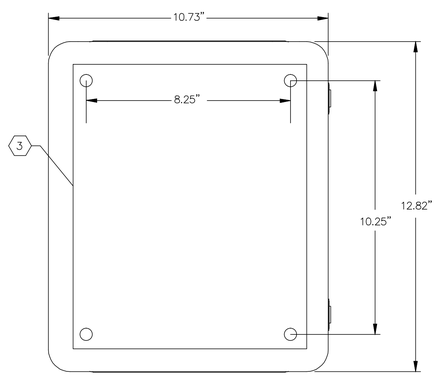

INSIDE PANEL VIEW

HTE (HIGHTIDE) ENCLOSURE LAYOUT

HIGHTIDE (HTE)

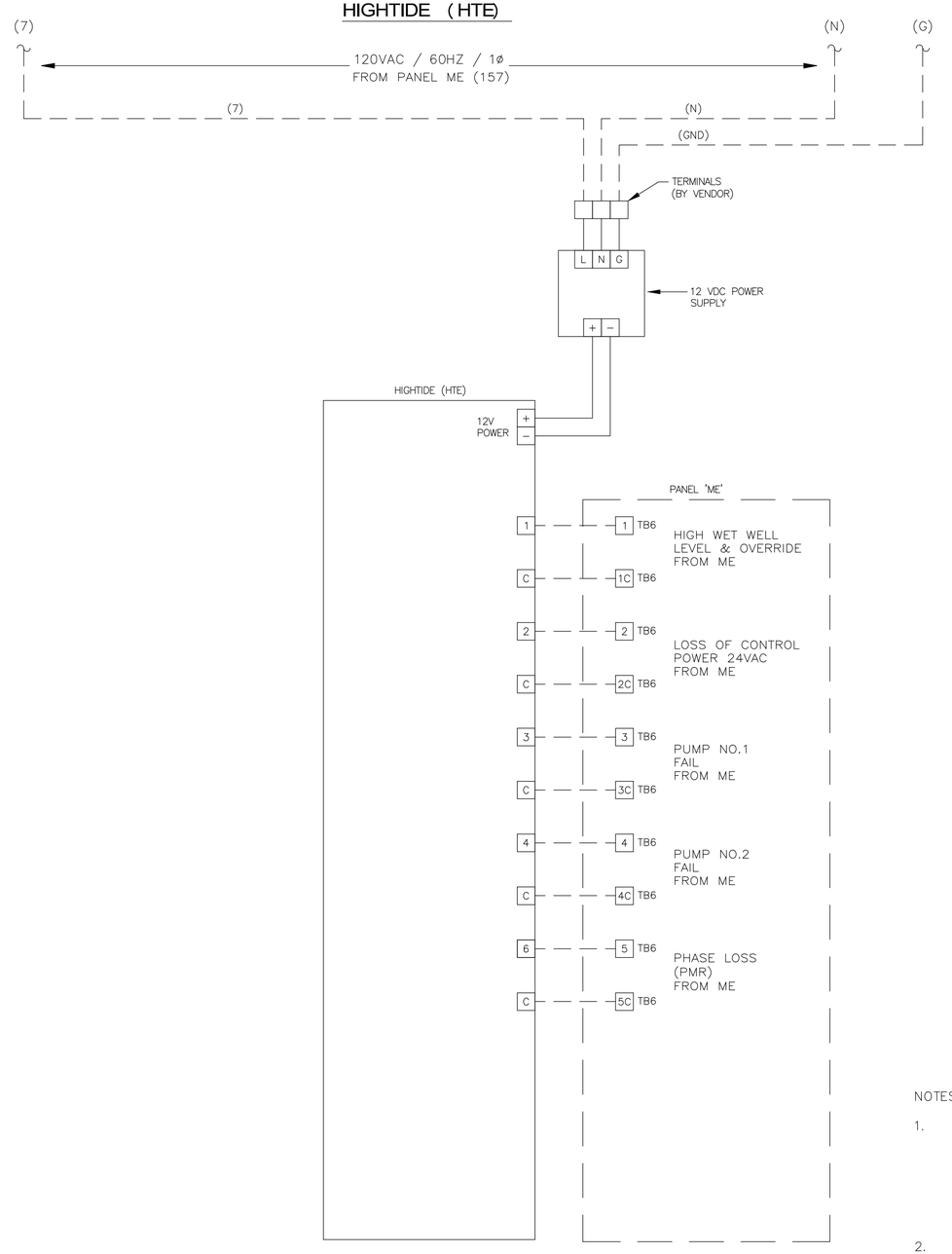

NOTES:

1. WIRING COLOR CODE:

240/480VAC POWER	BLACK
120VAC CONTROL POWER	RED
120VAC NEUTRAL	WHITE
24VDC POS	BLUE
24VDC NEG	BLUE/WHITE (BLUE)
EXTERNALLY POWERED CIRCUITS	YELLOW

2. DASHED LINES INDICATE ENTITIES EXTERNAL TO CABINET.

REV.NO.	DESCRIPTIONS	DATE
	FOR USE	

REVISIONS

SEAL

SEAL

NOTE
FOR USE WITH THE FOLLOWING
IN-FILL GRINDER "ME" PKGS ONLY

3PH/480VAC/4-11HP

HILLSBOROUGH COUNTY
PUBLIC UTILITIES
ENGINEERING & ENVIRONMENTAL SERVICES GROUP
925 E. TWIGGS STREET/TAMPA FLORIDA 33602/PH. (813) 272-5977

SMALL NEIGHBORHOOD GRINDER
PUMP STATION
ELECTRICAL, CONTROL & INSTRUMENTATION

HIGHTIDE HTT 1100 COMM. DEVICE (HTE)
CABINET LAYOUT, ELECTRICAL SCHEMATIC
AND BILL OF MATERIAL

DATE:	APRIL 2015
PROJ. #	T15001
DRAWN	
DESIGNED	
CHECKED	
PROJ. MGR.	

SCALE
HORIZONTAL:
VERTICAL: NA

FILE NUMBER
DRAWING NUMBER
E-4.0

STATUS: ---
REVISION

LIST OF MAJOR COMPONENTS

ITEM NO.	QTY	DEVICE ID	MANUFACTURER	PART NO.	DESCRIPTION
1	1	JB4	HOFFMAN	A1614CHNFSS6	ENCLOSURE, 16"H x 14"Wx 6"D, NEMA 4X, 304SS,WITH LOCK KIT, EPOXY WHITE FINISH
2	1		HOFFMAN	A16P14SS	SUBPANEL 14.75"Hx12.88" 304SS, EPOXY WHITE FINISH
3	2		HOFFMAN		HOLE SEAL, 2.50", 300 SERIES WEATHER-PROOF, EPOXY WHITE FINISH
4	5				POWER DISTRIBUTION BLK, 1 POLE 175A, 600VAC, PRIM 1 CONN 8-2/0 CU SEC. 1 CONN 8-2/0 CU

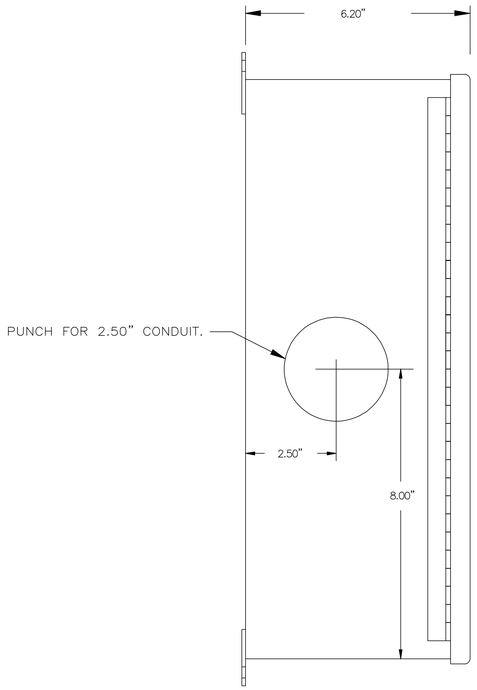

LEFT SIDE VIEW

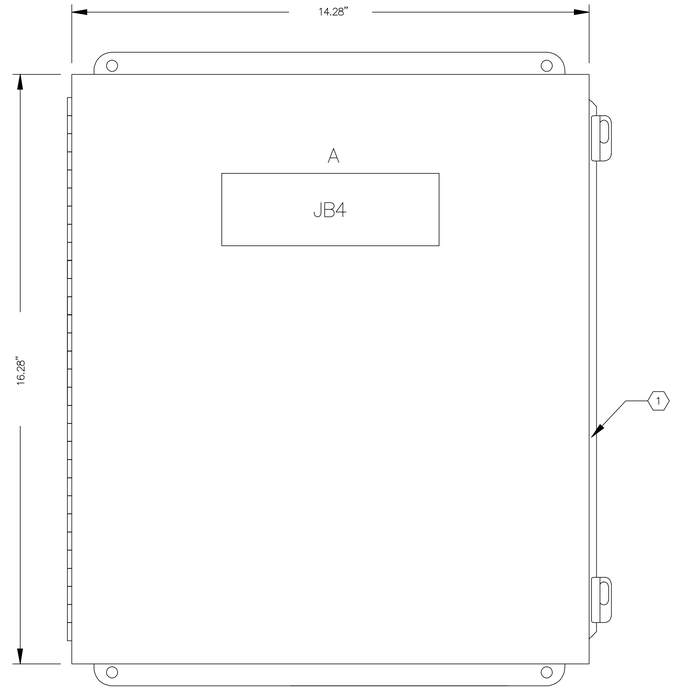

FRONT VIEW

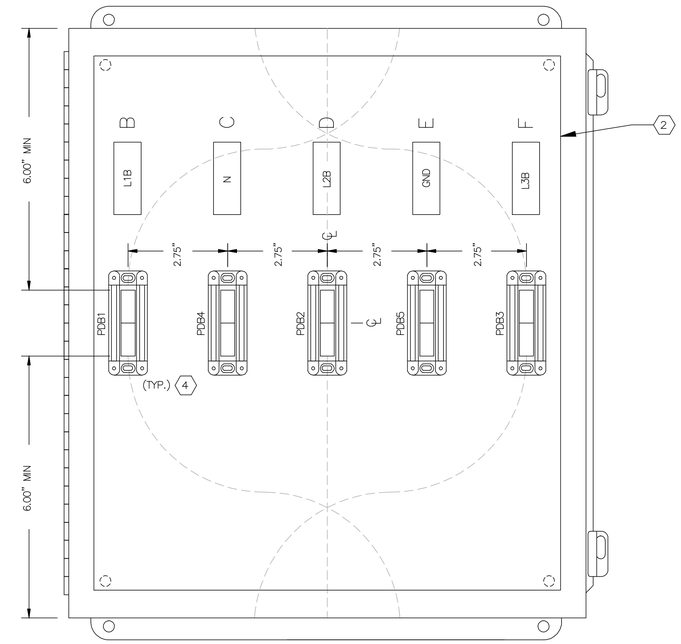

INSIDE PANEL VIEW

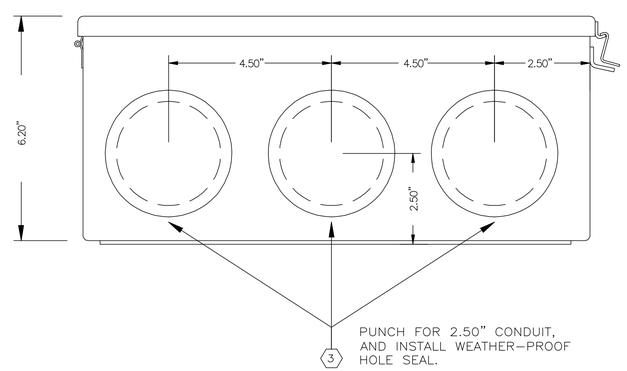

BOTTOM VIEW

NAMEPLATE SCHEDULE

N.P. NO	QTY	PLATE COLOR/SIZE	LRT COLOR/SIZE	ENGRAVING (LINE1/LINE 2/ETC.)
A	1	BLK / 2.00"H X 6.00" W	WHT / 1/2"	JB4
B	1	BLK / 0.75"H X 2.50" W	WHT / 1/4"	L1B
C	1	BLK / 0.75"H X 2.50" W	WHT / 1/4"	N
D	1	BLK / 0.75"H X 2.50" W	WHT / 1/4"	L2B
E	1	BLK / 0.75"H X 2.50" W	WHT / 1/4"	GND
F	1	BLK / 0.75"H X 2.50" W	WHT / 1/4"	L3B

NOTE: FOR USE WITH THE FOLLOWING "ME" PACKAGES ONLY:
– DUP, 3PH/480VAC/4–11HP

GENERATOR TERMINATION PANEL (JB4)

REV.NO.	DESCRIPTIONS	DATE
	FOR USE	

REVISIONS

SEAL

SEAL

NOTE
FOR USE WITH THE FOLLOWING
IN–FILL GRINDER "ME" PKGS ONLY

3PH/480VAC/4–11HP

HILLSBOROUGH COUNTY
PUBLIC UTILITIES
ENGINEERING & ENVIRONMENTAL SERVICES GROUP
925 E. TWIGGS STREET/TAMPA FLORIDA 33602/PH. (813) 272–5977

SMALL NEIGHBORHOOD GRINDER
PUMP STATION
ELECTRICAL, CONTROL & INSTRUMENTATION

GENERATOR TERMINATION BOX JB4 (SMALL)
CABINET LAYOUT AND BILL OF MATERIAL

DATE:	APRIL 2015
PROJ. #	T15001
DRAWN	
DESIGNED	
CHECKED	
PROJ. MGR.	

SCALE
HORIZONTAL:
VERTICAL: NA

FILE NUMBER
DRAWING NUMBER
E-5.0

STATUS:
REVISION